Atlantium
Enlightened Water Technologies

UV Water Treatment
Atlantium Hydro-Optic™ Solutions

User Manual

Guide to the Atlantium Hydro-Optic UV System

Models RZ300-11

RZ300-12

RZ300-13

RZ300-14

Document No. PG42MA00E

August 2017

Copyright © August 2017 Atlantium Technologies Ltd. All rights reserved.
Publication Catalog No. **PG42MA00E**, Revision **009**, August 2017

Standard Controller software version: BM8.xx
TRACS software version: 3.xx

System and accessory specifications are subject to change without notice.

IMPORTANT NOTICE

It is strictly forbidden to alter/change the system hardware in any way.

Any change made without written permission from Atlantium shall void the warranty.

Atlantium and the Atlantium Logo are Trademarks and/or Registered Trademarks of Atlantium Technologies Ltd., its subsidiaries or affiliates in the United States and/or other countries. All other company or product names are the trademarks or registered trademarks of their respective holders. All rights not expressly granted are reserved.

The information contained in this document is proprietary and confidential information of Atlantium. Any unauthorized reproduction, use or disclosure of this material, or any part thereof, is strictly prohibited. This document and information is intended solely for authorized Atlantium customers as permitted by Atlantium and for the limited purposes set forth herein. For more information, including contact details for your local Atlantium representative, please visit the Atlantium website at: www.atlantium.com

Validations and certifications completed:

Complies with
UL 508
E113027

Revision History

Revision #	Description	Date
001	Based on previous version with united electrical location options. Now electrical options are location specific. Added Standard Controller for up to 4 lamps. Added DPM support in conditionals	May 2014
002	Updated Troubleshooting and surge prevention	June 2014
003	Electrical Warning added	June 2014
004	Circuit breakers updates, electrical and diagram updates, Temperature sensor on last Connection Box, CIP cart with switch	Aug 2015
005	Updates to wave guide information. Small corrections	Sept 2015
006	Added registers.	Sept 2015
07	General updates	Mar 2017
08	Updates for Cleaner counters; Corrected page numbering; Added new Ballast Module options.	July 2017
09	Correction to 48VDC Module installation information.	Aug 2017

1 Table of Contents

1 Introduction 1
1.1 Before You Begin 3
1.2 Tags and Their Meaning 4
2 About the RZ300 System 1
2.1 The **RZ300 Series** Units 2
2.2 **RZ300** Systems' Interface Control Drawings 3
2.3 Atlantium System Footprint 4
2.4 The Ballast Module 5
2.5 Electrical Usage 6
2.5.1 Power Consumption and Local Voltage Requirements 6
2.6 Surge Protection 7
2.6.1 Surge Protector Devices 8
2.6.2 The OVPD Module 8
2.7 48VDC Module 9
2.8 The Controller 9
2.9 Environmental Requirements 10
2.10 Regulatory Compliance 10
3 Getting Ready for Installation 1
3.1 Planning 1
3.1.1 Access 1
3.1.2 Hydraulics 1
3.1.3 Flow Data 2
3.1.4 Application 2
3.2 Typical Installation Set-Up 2
3.3 Electrical Requirements 8
3.3.1 Typical Atlantium System Cabling Diagram 8
3.3.2 Preparing for the Electrical Wiring to the Mains 11
3.4 The Piping Infrastructure 14
3.5 Flow Measurement/Detection 14
3.6 Sampling Valves 15
3.7 Sampling Valve Components and Kits 15
3.8 Draining Valves 17
3.9 CIP Ports and CIP Kits 17
3.10 Connection to Facility Control 19
3.10.1 System On-Site Connections 20
3.10.2 TRACS Backup Requirements 20
4 Safety Overview 1
4.1 UV Lamp Safety 1
4.2 Electrical Hazards and Safety Considerations 3
4.3 Keep the Unit Full of Water 4
4.4 Chemical Use for Cleaning in Place (CIP) 4
4.5 System Safety Features 4
4.5.1 UV Protective Seal 4
4.5.2 Lamp On/Off Switch 4
4.5.3 Software Safety Controls 5
4.6 Atlantium Training 5
5 Installing the Atlantium System 1
5.1 Installation Process Flow Diagram 1
5.2 Setting the Main Circuit Breakers to OFF Position 2
5.3 Unpacking And Checking Package Contents 2
5.4 Installing Sampling Points and CIP/Draining Ports 3

5.4.1 Installing the Inlet/Outlet Sampling Points 3
5.4.2 Installing the CIP/Draining Ports 4
5.5 Positioning the Atlantium Unit 6
5.5.1 Required Equipment 6
5.6 Installing Surge Protection 7
5.6.1 Installing a Surge Protection Device 8
5.6.2 Mounting and Connecting the OVPD Module 8
5.7 The Controller 9
5.7.1 Mounting the Controller 9
5.7.2 Controller Connections 10
5.7.3 Closing the Controller's Back 14
5.8 Mounting the 48VDC Module 14
5.9 Installing the Ballast Module(s) 16
5.10 Connecting the Ballast Module Cables 19
5.11 Cabling Components 20
5.11.1 Cabling Signal Components 20
5.12 Connecting the 48VDC Module 21
5.12.1 Connection Box Card 1300-1500 21
5.12.2 **Schematic Diagrams 23**
5.13 Modbus Communication Connections 25
5.13.1 Modbus Cable Connections for Multiple Controllers 25
5.13.2 Setting Up the Facility System Communication Properties 27
5.14 Connecting TRACS 27
5.15 Connecting the Atlantium System to the Mains 28
5.15.1 Connecting the Controller's Power Cable 28
5.15.2 Connecting the 48VDC Module to the Mains 30
5.15.3 Connecting the Atlantium Unit's Power Cable 30
5.16 Installation Check List 30
6 Initializing the Atlantium System 1
7 Configuring the Controller 1
7.1 Configuring the Operation Mode 2
7.2 Configuring the Flow Settings 4
7.3 Configuring Cleaner 5
7.4 More System Settings 5
7.5 Configuring the Modbus 6
7.6 Configuring the Technician Settings 6
8 Configuring the TRAC Software 1
8.1 Installing the USB Driver 1
8.2 Installing **TRACS 2**
8.3 Activating the **TRAC Software 2**
8.4 About the **TRACS** Screens 3
8.5 Viewing Lamp Details 4
8.6 Configuring the Atlantium Unit Communications ID 5
8.7 Configuring the Database Collection Settings 6
8.7.1 Setting System Startup to Include **TRACS 7**
8.7.2 Change the PC Power Settings 7
9 First Time System Activation 1
9.1 Cleaning the Atlantium Unit 1
9.2 Introducing Water 1
9.3 Igniting the Lamps 1
9.4 Initiating the Water Flow 2
9.5 Adjusting the Auxiliary Equipment 2
9.6 System Tuning 2
9.7 Installation QA 3
10 Operating the Atlantium System 1
10.1 Operational Guidelines 1
10.2 Basic Operational Tasks 1

10.2.1 Shutting Down the Atlantium System 2
10.2.2 Starting up the Atlantium System 2
10.3 Viewing System Status 3
10.4 Viewing Recent Events 4
10.5 Taking Microbial Samples 4
10.5.1 Microbial Analysis Guidelines 6
10.6 Backing up the **TRACS** Database 6
10.7 Replacing the **TRACS** Database 7
10.8 Displaying TRACS History 7
10.9 Exporting **TRACS** History to MS Excel Format 9
11 System Maintenance 1
11.1 Walk-Around Inspection Tour 1
11.2 Cleaning In Place (CIP) 2
11.2.1 Selecting the Correct Chemicals for CIP 2
11.2.2 Preparing the Chemical Solution 3
11.2.3 Performing CIP 4
11.3 Checking the Cooling Fans 8
11.4 Replacing a Lamp 9
11.5 Cleaning/Replacing the UV Intensity Wave Guide 14
11.6 Cleaning/Replacing the UV Intensity Sensor's Mirror 16
11.7 Cleaning/Replacing a Lamp's Quartz Tube and O-rings 17
11.8 Checking/Replacing Sensors 20
11.8.1 Checking an Adjustable UVIS Sensor 20
11.8.2 Replacing an Adjustable UVIS Sensor 21
11.8.3 Replacing/Checking a UVT Analyzer or Fixed UVIS Sensor 23
11.9 System Tuning 24
11.10 Advance Maintenance 25
11.10.1 Replacing the Temperature Sensor 26
11.10.2 Replacing the Temperature Converter Card 27
12 Troubleshooting 1
12.1 The UV dose is below the allowable threshold **2**
12.2 Unit temperature is too high **3**
12.3 Unit temperature is critically high! **3**
12.4 The rate of the water flow is too low **4**
12.5 UV lamp ignition failed **5**
12.6 Temperature sensor fault **6**
12.7 Ballast temperature is too high 6
12.8 System type settings error **7**
12.9 Lamp mains failure 7
12.10 **Unexpected failure for an unknown reason** **8**
12.11 Lost communication with ballast module **9**
12.12 Clean system deposit **9**
Appendix A. Modbus Communication Protocol 1
A.1 Modbus Registry Map 1
Appendix B. System Messages 1
Appendix C. Checking the System Parameters 1
Appendix D. Glossary of Terms 1

1 Introduction

Congratulations on purchasing an Atlantium **RZ300 Series** Hydro-Optic UV Water Treatment System. This user guide provides you with clear guidelines for preparing the site for installation, correct installation and software configuration procedures, and a good understanding of all system functions for maximum benefit from your Atlantium Unit.

The Atlantium **RZ300 Series** systems guarantee water bio-security at optimized energy efficiency, and meet EPA criteria for providing bio-security.

Atlantium systems are designed to provide applications for the following Industries:

- **Aquaculture**
- **Dairy**
- **Municipal**
- **Power Plants**
- **UPW**
- **Marine**
- **Bio-Pharma**
- **Bottled Water**
- **Beverages**
- **Beer**
- **Aquariums**
- **and more**

Applications

- **Water Disinfection** - meets US EPA criteria for providing bio-security
- **Chlorine Replacement** - provides a chemical-free alternative to chlorine for treating source water. It easily inactivates microorganisms including those that are resistant to chlorine and heat.
- **Non-Thermal Pasteurization** - replaces energy-intensive heat pasteurization of water - meets US FDA criteria for pasteurized equivalent water,.
- **Post-Active Carbon** - protects against breakthroughs and reduces bio-fouling downstream. Significantly reduces the frequency of aggressive cleaning, and lengthens the lifespan of RO membranes
- **Dechlorination / Chlorine Destruction -** efficient, clean, non-chemical alternative to activated carbon filter or sodium bio-sulfite. Reduces risk, better protection, lower operating expenses.
- **Ozone Destruction** – efficient, cost-effective solution.
- **Ultrapure water (UPW)** - efficient, cost-effective solution that complies with the uncommonly stringent specifications for ***high-purity water.***
- And more.

Patented Innovative Technology

- Field proven worldwide, used by world-leading brands
- Based on Hydro-Optic engineering that optimizes UV efficiency and enables uniform dose distribution
- Medium Pressure High Intensity UV effective in cold & warm water, compromises microorganisms' repair mechanisms for long-term bio-security
- Guaranteed required dose for complete microbial inactivation.
- Sustainable operation provides the security and stability that the industry demands.

Guaranteed Dose Delivery

- Unique monitoring & control software assures that required UV dose is being delivered at all times.
- Dedicated UVIS sensors per lamp for real-time monitoring
- Automatically adjusts lamp power based on real-time analyses of critical parameters such as water flow rate, lamp intensity and water transmittance to UV (UVT).
- A user-friendly interface displays the monitored data in real-time including the actual delivered dose as well as the other critical parameters, so you can verify that you are actually getting the dose that you need.

Lower Electrical Consumption

- Fiber optic and hydraulic principles applied to UV system design enables:
- Optimized UV power and uniform dose distribution.
- Efficient use of power, with lower electrical consumption than low or medium-pressure-based UV systems.

Minimum Down Time

- True in-line system.
- UV lamps securely positioned outside the water.
- Quick lamp replacement (4 minutes) and better safety.

Integrates with your Process Line

- Field proven installation.
- With no additional software, you can integrate the Atlantium system into your current process using Atlantium's customizable settings.

TRACS Total Reporting Analysis & Control Software (Optional)

- Reporting functions meet your regulatory requirements
- A single installation of Atlantium's **TRAC Software** enables real-time access of up to nine Atlantium systems.
- The sophisticated data logging system enables traceability over time of all monitored data.
- It maintains a database and provides detailed analysis and reporting functions that can be used for trend analysis or proof of compliance.
- Settings reports document any changes to the operations and controls
- You can print out history and all the reports you need, ready for signature.

TRACS Total Reporting Analysis & Control Software can be upgraded into your Atlantium system if the need arises at a later time.

Regulatory Compliance

- Meets the most stringent regulatory criteria including FDA and EPA.
- Automatically generated reports at the push of ab button for proof of compliance and traceability.
- Provides validated minimum required dose and not average dose.

Efficiency and Easy Maintenance

- For total efficiency and dependable performance, the Atlantium system monitors the lamps for performance, assuring that a lamp is replaced only when absolutely needed.
- By following the easy preventive maintenance programs you keep the system working at peak performance.
- The **Viewport** allows you to safely peek at what's going on inside.

1.1 Before You Begin

Before you begin using this product, or any installation or service operation, please read the following safety information:

- Attention to these warnings helps prevent personal injuries and damage.
- It is your responsibility to use the product in an appropriate manner.
- This product is designed for use solely indoors.
- You are responsible if the product is used for other than its designated purpose or in disregard of Atlantium instructions. Atlantium shall assume no responsibility in any way for such use of the product.
- The product is used for its designated purpose if it is used in accordance with its product documentation and within its performance limits.
- Using the product requires technical skills. It is therefore essential that only skilled and specialized staff or thoroughly trained personnel be allowed to use the product.
- Keep the basic safety instructions and the product documentation in a safe place and pass them on to the users.
- Applicable local or national safety regulations and rules for the prevention of accidents must be observed at all times.

1.2 Tags and Their Meaning

The following indicators are used in the product documentation to warn the reader about risks and dangers.

Indicates a hazardous situation which, if not avoided, will result in death or serious injury.

Indicates the possibility of incorrect operation which can result in damage to the product.

Indicates a hazardous situation involving electricity which, if not avoided, can result in death or serious injury.

Indicates a hazardous situation involving Electrostatic Discharge (ESD), which, if not avoided, can result in damage to the product.

Indicates a hazardous situation involving UV light which, if not avoided, can result in death or serious injury.

Indicates a hazardous situation involving a hot surface which, if not avoided, can result in death or serious injury.

Indicates a hazardous situation involving working in an enclosure with moving parts, which if not avoided, can result in serious injury to the hands.

Indicates a hazardous situation involving mercury, a poisonous material, which, if not avoided, can result in death or serious injury.

Indicates a hazardous situation involving caustic chemicals which, if not avoided, can result in death or serious damage.

Indicates that components or equipment are heavy and care is to be taken to avoid lifting incorrectly. Incorrect lifting can be dangerous to the personnel lifting and may result in dropping and damaging the components or equipment.

Indicates that components or materials to be discarded are classified as hazardous waste and must be disposed of appropriately.

Indicates information related to installation, safety or use of system.

2 About the RZ300 System

This Atlantium **RZ300-11**, **RZ300-12**, **RZ300-13**, or **RZ300-14** Hydro Optic Water Disinfection System includes a disinfection unit, a Ballast Module configuration, and Controller. The quartz disinfection chamber takes advantage of ***Total Internal Reflection*** and reflects UV light back into the water to uniformly distribute the UV dose. Water flows unimpeded, resulting in low head-loss.

The specially designed short (Arc length 295mm/11.6inch) MPHI lamps deliver a broad spectrum disinfection that irrevocably damages DNA and proteins in microorganisms. Housing Atlantium Quick Connect MPHI lamps within a thick quartz tube significantly reduces risk of breakage and its consequences. A UV Intensity Sensor (UVIS) provides continuous measurement of each lamp's output.

In addition, a UVT Analyzer reports and tracks the water quality and a UV-proof Viewport allows you to view the inner workings. An optional cleaning system cleans the surface of the quartz tubes automatically.

2.1 The RZ300 Series Units

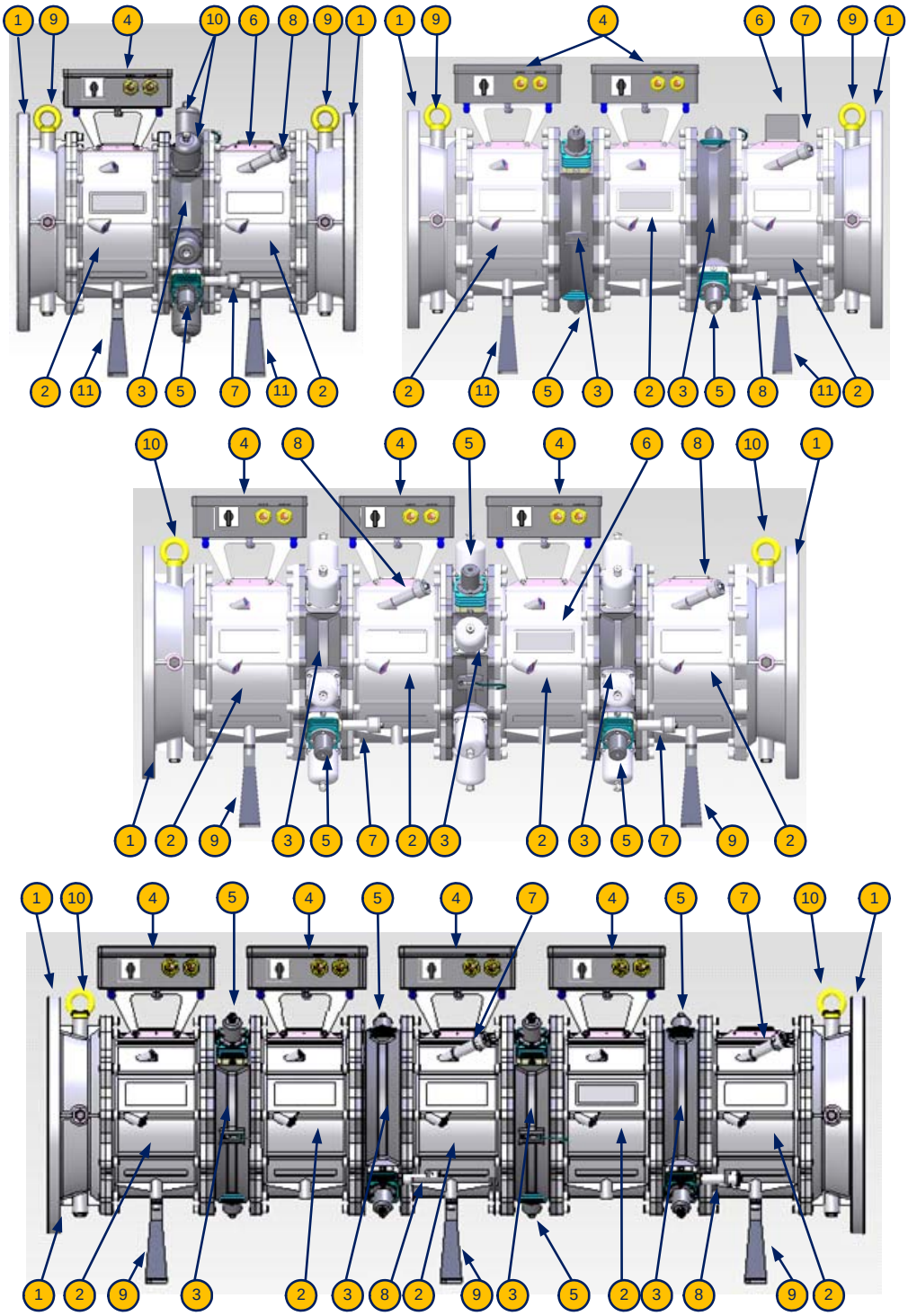

Figure 2-1: The **RZ300-11**, **RZ300-12**, **RZ300-13**, and **RZ300-14** Units

The **RZ300-11** and **RZ300-13** shown above contain the optional Ultrasound cleaning system.

The **RZ300-12** and **RZ300-14** shown above do not contain the optional Ultrasound Cleaning system.

All of the system types may include the optional Cleaner.

Table 2-1: Atlantium Unit Key

#	Item	Description
1	Flange or Ferrule/Tri-Clamp interface	The unit connects to the facility piping via a flange interface as per customer order
2	Quartz Disinfection Chamber	The quartz pipe in which the disinfection occurs
3	Lamp Chamber	The chamber that holds the lamp and optional Cleaning system
4	Connection Box	The box that sits on top of each lamp unit and holds the electrical circuitry
5	Lamp Arc length (mm / inch): Lamp total length (arc + ceramic ends) (mm / inch):	Lamp encased in quartz tube assembly Medium Pressure High Intensity (MPHI) 295 / 11.6 462.8 / 18.22
6	Viewport	The UV-proof window to view the Unit working.
7	UVT Analyzer	The sensor that measures the UV transmittance through the water. Together with the UV Intensity sensor and the Controller, it analyzes, tracks and reports the water quality.
8	UV Intensity Sensor	The sensor that measures the UV intensity in the Lamp chamber and feeds it to the real time dose calculation.
9	Lifting Support	A lifting element used when lifting the Unit.
10	Cleaning system	A sophisticated cleaning system for the quartz tube
11	Triangle Support Brackets	Brackets that are used to support and balance a unit anchored to customer supplied supports or surface that hold up the unit at least 750mm / 29.5inch above the floor (see ***RZ300 Systems' Interface Control Drawings*** on page **2-3**).

2.2 RZ300 Systems' Interface Control Drawings

For the ICDs of the systems in the **RZ300 Series**, consult the accompanying ICD files.

2.3 Atlantium System Footprint

The Atlantium system has a small, compact footprint that facilitates in-line installation in any process train.

Table 2-2: **RZ300-11/12/13/14** Physical Specifications

Item	Detail	
lamps **RZ300-11** **RZ300-12** **RZ300-13** **RZ300-14**	 1 2 3 4	
Atlantium Unit Construction Materials: Casing: Quartz Chamber:	Electro-polished stainless steel 316 High grade fused silica (Quartz)	
Standard Pipe Flange Interface Options:	DIN2576 DN350 PIN16	14” 150-lbs ANSI
Unit Length (mm / inch) **RZ300-11** **RZ300-12** **RZ300-13** **RZ300-14**	 782 / 30.8 1100 / 43.3 1418 / 55.8 1736 / 68.4	 796.2 / 31.35 1104 / 43.9 1432 / 56.4 1754 / 69
Flange Inner ∅ Diameter (mm / inch)	350 / 13.8	355.6 / 14
Flange Outer ∅ Diameter (mm / inch)	505 / 19.9	533.4 / 21
Width at Widest Point (mm / inch)	505 / 19.9	505 / 19.9
Bolt Circle Diameter (mm / inch)	460 / 18.11	476.3 / 18.75
Bolt Hole Diameter (mm / inch)	22 / 0.87	28.4 / 1.12
Number of Bolts	16	12
Unit Volume (Liter / Gallon) **RZ300-11** **RZ300-12** **RZ300-13** **RZ300-14**	 60 / 15.85 83 / 22 105 / 27.7 127 / 33.5	 60 / 15.85 83 / 22 105 / 27.7 127 / 33.5
Weight (without water) (Kg / lb) Without Cleaner **RZ300-11** **RZ300-12** **RZ300-13** **RZ300-14** With Cleaner **RZ300-11** **RZ300-12** **RZ300-13** **RZ300-14**	 140 / 309 184 / 406 228 / 503 249 / 549 142 / 313 188 / 415 234 / 516 304 / 670	 160 / 353 205 / 452 228 / 503 249 / 549 162 / 357 209 / 357 255 / 563 304 / 670

Table 2-2: **RZ300-11/12/13/14** Physical Specifications

Item	Detail	
Service Clearance on each side (mm / inch)	750 / 29.5	750 / 29.5
Minimum Height above Floor Level (mm / inch)	750 / 29.5	750 / 29.5
Maximum Working Pressure	7 Bars / 102 psi	7 Bars / 102 psi
Maximum Flow Rate	Application Dependent	Application Dependent
Distance between Triangle Support Brackets (mm / inch) **RZ300-11** **RZ300-12** **RZ300-13** **RZ300-14**	 318 / 12.5 636 / 25 954 / 37.6 636 / 25	 318 / 12.5 636 / 25 954 / 37.6 636 / 25
Distance between Bolt Holes on Supports	345 / 13.6	345 / 13.6
Bracket Nut / Bolt Size (mm / inch)	13 / 0.5	13 / 0.5

2.4 The Ballast Module

Ballast Module is a water-proof easy plug-n-play box that contains the ballast power supply and related circuitry. Its convenient plugs make it easy to service. Its modular design makes it serviceable and flexible and easier to fit into an existing plant. A Ballast Module is supplied for each lamp in the Atlantium system. Its heat sink frame complies with industry standards and contains one cooling fan on the top. It can be mounted on the wall or other suitable anchoring point. The location of the Ballast Module must be designated according to the maximum distance needed for positioning the **Cable Harness** of the Atlantium Unit. The **Cable Harness** is **5m / 16.4'**(also available in **10m / 32.8'** length). For systems with more than one lamp, the Ballast Modules can be positioned one above the other or next to one another. The Ballast Module must have at least 300 mm (11.8 inches) of clearance on its right and left sides for proper ventilation and 300mm (11.8 inches) of clearance on the bottom for cable routing.

Refer to the **Ballast Module ICD** accompanying this documentation.

For more details on mounting, see ***Installing the Ballast Module(s)*** on page **5-16**.

Table 2-3: Ballast Module Physical Details

Physical	Details
Dimensions (H x W x D) (mm/inch): Ballast Module B Ballast Module C	 313 / 12.3 x 228 / 9.0 x 548 / 21.6 486.7 / 19.16 x 348 / 13.7 x 114.5 / 4.51
Weight (Kg/Lb): Ballast Module B Ballast Module C	 21.5/ 47.4 6.5 / 14.3
Heat Load per Ballast Module: (For calculating space cooling requirements)	210W
Protection Category:	IP 56.

2.5 Electrical Usage

Utilize a Residual Current Device (RCD) that is Type A with 3000A surge resistance.

Atlantium recommends ABB P/N F204 A-xx/0.03 AP-R (xx represents the current rating according to the system load. Select the appropriate RCD accordingly. Calculating the value, takes into account the power consumption of the system (see the table in the section below) and the mains voltage of your locale.

The tables below detail the Atlantium Unit's electrical details and power consumption.

Table 2-4: **RZ300 Series** Electrical Details

Electrical	Details
Phase: Voltage:	3 phase 400/440/480 VAC per Ballast Module
For locations with 400VAC:	5-wire system that contains 3 phases, Neutral and Ground (The Neutral and Ground are mandatory)
Maximum allowed voltage tolerance:	±10% from the nominal voltage

2.5.1 Power Consumption and Local Voltage Requirements

The table below details the power consumption or the Atlantium system according to local voltage

Table 2-6: **RZ300-11/12** Power Consumption

# of lamps :			1		2	
Nominal lamp power (kW):			4.2		8.4	
Cleaner type	Feeding type	Feeding voltage (V)	Current consumption each phase (A)	Required circuit breaker	Current consumption each phase (A)	Required circuit breaker
No cleaner	Direct Feeding	400	6.7	3x10A	13.4	3x16A
Ultrasonic Cleaner	Direct Feeding	400	8.4	3x10A	15.1	3x20A

Table 2-7: **RZ300-13** Power Consumption

# of lamps :			3					
Nominal lamp power (kW):			12.6					
System branch containment			Lamp 1+2 + optional cleaner		Lamp 3		Main feeding	
Cleaner type	Feeding type	Feeding voltage (V)	Current consumption each phase (A)	Required circuit breaker	Current consumption each phase (A)	Required circuit breaker	Current consumption each phase (A)	Required circuit breaker
No cleaner	Direct Feeding	400	20.0	3x25A	6.7	3x10A	20.1	3x25A
Ultrasonic Cleaner	Direct Feeding	400	15.1	3x20A	6.7	3x10A	21.8	3x32A

Table 2-8: **RZ300-14** Power Consumption

# of lamps :			4					
Nominal lamp power (kW):			16.8					
System Branch containment			Lamp 1+2 + optional cleaner		Lamp 3+4		Main feeding	
Cleaner type	Feeding type	Feeding voltage (V)	Current consumption each phase (A)	Required circuit breaker	Current consumption each phase (A)	Required circuit breaker	Current consumption each phase (A)	Required circuit breaker
No cleaner	Direct Feeding	400	13.4	3x16A	13.4	3x16A	26.8	3x32A
Ultrasonic Cleaner	Direct Feeding	400	15	3x20A	13.4	3x16A	28.4	3x40A

2.6 Surge Protection

Every Atlantium system **must** be protected by a device that prevents electrical surges and fluctuations from causing damage. There are three types of surge protection:

- UPS (Uninterruptible Power Supply) has an internal battery that allows the equipment plugged into it to continue to run in the event of a power outage until power is restored. It also has the benefit of performing the same functionality of surge protectors, protecting against spikes and surges. If needed, the UPS allows the system to be shut down cleanly if power is out for a lengthy period.
- Surge protection device protects your equipment from variations in electrical current, such as surges and spikes.
- OVPD module (Over Voltage Protection Device) - available from Atlantium. see below.

2.6.1 Surge Protector Devices

Surge protection devices are designed to protect industrial communication networks. This device recommended by Atlantium uses a combination of 3-electrode gas discharge tubes and fast clamping diodes. Typical applications include industrial processing equipment, transmission systems, I/O cards, probes, actuators, and displays. Surge protection devices are available via Atlantium.

Table 2-9: Surge Protector Details

Atlantium PN	DATA SHEETS	Module PN	Description
EP0002300	DOC002300	8859660000	SURGE PROTECTOR 400V 3P 40KA TNC CONFIG
EP0002800	DOC002800	1352740000	SURGE PROTECTOR L + N, 230V

2.6.2 The OVPD Module

The Over Voltage Protection Device (OVPD Module) may be required in locations where fluctuations in the voltage may occur. If supplied, see the **OVPD Module ICD** accompanying the documentation. Consult your Atlantium representative. The table below details when an OVPD module and the Power Module are usually required.

Table 2-10: OVPD Module Details

Physical	Details
Dimensions (W x H x D) (mm/inch):	400/15.74 x 600/23.62 x 282/11.10
Weight (Kg/Lb.):	20244
Minimum Clearance for Electrical Cables Routing on each of two sides (top/bottom) (mm/inch): Total Clearance (mm/inch):	300/18.81 1200/47.24
Electrical	
Voltage:	Up to 600VAC
Protection Category:	IP 56.

2.7 48VDC Module

The **48VDC Module** may be utilized some installations in localities with 440/480VAC **Electrical Power Distribution Systems**, such as, the USA and Mexico. It provides a 48VDC power feed to the Connection Box. The **48VDC Module** can be mounted on a wall or suitable anchoring point up to **10m / 32.8'**. from the Atlantium Unit. If supplied, see the **48VDC Module ICD** accompanying the documentation.

Table 2-11: 48VDC Module Details

Physical	Details
Dimensions (W x D x H) (mm/inch):	300 / 11.8 x 150.7 / 5.9 x 400 / 15.75
Length with open door:	420.9 / 16.6
Minimum Clearance for Electrical Cables Routing:	5 0/ 2
Weight (Kg/Lb.):	10 / 22
Electrical	
Maximum Power Consumption:	Maximum 285W
Voltage: Incoming Outgoing	 200-500VAC 48V
Protection Category:	IP 56.

2.8 The Controller

The Atlantium system is monitored and controlled from a **Controller**. It can be mounted on a wall or suitable anchoring point up to 50 meters (164.04 ft.) from the Atlantium Unit. However, it should be located in close proximity to the Atlantium Unit where it is easy to reach the touch screen and read the monitoring information. See the **Standard Controller ICD** accompanying the documentation.

Table 2-12: Controller Details

Physical	Details
Dimensions (W x D x H) (mm/inch):	400/15.75 x 300/11.82 x 144.4/6.12
Weight (Kg/Lb.):	0.9/1.9
Minimum Clearance for Electrical Cables Routing (mm/inch):	50/2
Electrical	
Maximum Power Consumption:	Maximum 40W
Voltage:	1 phase 120-240 Voltage

2.9 Environmental Requirements

The Atlantium system is to be situated indoors in an area that is adequately cooled and with sufficient air flow. However, there have been many successful Atlantium installations in less friendly environments. Consult your Atlantium representative to choose the most suitable location.

Table 2-13: Atlantium System Environmental Details

Environmental	Details
Maximum ambient air temperature:	45°C (113°F)
Maximum ambient air temperature in the Ballast Modules environment:	45°C (113°F)
Maximum atmospheric relative humidity:	90%
Water Temperature: Maximum – high temperature: For water temperature above 70°C (160°F) consult with Atlantium service engineers Minimum – cold temperature:	 No limit

2.10 Regulatory Compliance

The Atlantium System complies with the following regulatory standards:

- Long Term 2 Enhanced Surface Water Treatment Rule of January 5th, 2006
- 3rd party validated by HDR/HydroQual, Inc.
- EMC directive 2004/108/EC
- European Low Voltage Directive (LVD), 2006 / 95 / EC for electrical safety
- Council Directive 98 / 83 / EC of 3 November 1998 for the quality of water intended for human consumption
- ISO 9001:2008 Quality Management Standard – Development, Design, Production and Sales of Water Disinfection Systems
- US Federal Performance Standards 40 CFR 141.720
- All components have CE or UL 508 NRTL (MET) certification
- Resloucion exenta No 2.327 del 31 de diciembre de 2010, en el marco de la Ley General de Pesca y Acuicultura
- GOST Standards Institute, Russian Federation
- National Institute of Public Health, Poland

3 Getting Ready for Installation

Using the guidelines and information in this section, you can prepare the piping and electrical setup for installing the Atlantium Hydro Optic Water Treatment System. If you have any questions, consult with an Atlantium application engineer.

3.1 Planning

Consider where to locate the unit from the perspective of your process. Prepare your installation plan according to the planning points below, as well as the other guidelines in this manual.

3.1.1 Access

- **Premises Access**
  - Take into account that sufficient door space is required to transport the Atlantium Unit into the facility where it is to be placed.
- **Service Access**
  - Take into consideration that sufficient space is required for maintenance personal to access the Atlantium Unit for periodic component replacement.

3.1.2 Hydraulics

- **Piping**
  - Align the upstream and downstream piping with the designated location for the Atlantium Unit.
  - Prepare the flanges/ferrules and piping as specified according to on page 2-6. To avoid a step in the connection, make sure that the internal diameters where the Atlantium Unit and your piping match.
  - **Do not** use sealing material that contains graphite when sealing the flanges/ferrules and gaskets as it accelerates the corrosive process on stainless-steel components, including those of the Atlantium system.
- **Mechanics**
  - Prepare the supports needed for the Atlantium Unit, noting the minimum level above the floor is at least 750mm / 29.5 inch between the floor and the bottom of the provided triangle support brackets.
  - Check that the piping on the inlet and outlet sides has adequate support structures so that there are no mechanical stresses that may endanger the Unit.
  - Check the upstream and downstream piping for vibrations. Make sure that the piping to be attached to the Atlantium Unit is anchored and reinforced to protect the Unit against vibration. A high vibration level can cause damage to any hydraulic system, including the Atlantium unit. High vibration can be caused by an unbalanced pump or by sudden valve close.
- **Hydrodynamics**
  - Water hammer can cause damage to any hydraulic system, including the Atlantium Unit. Make sure that this phenomenon does not occur in your facility's water line. To prevent water hammer, consult your system engineer and check your facility system procedures, including:
    - When starting the water flow when the lines are empty, keep valves open so that the air in the pipes has a simple release pathway.
    - Sudden valve closures can cause water hammer. Make sure that valves close gradually, enough to avoid this problem.
    - Ensure that all pumps that impact the Atlantium system employ soft start-up procedures.
    - The Atlantium Unit must be totally filled with water. Assure that no air can be trapped in the unit and that air can be released. Verify through the Unit’s viewport after installation that there are no bubbles.

3.1.3 Flow Data

- Evaluate your flow trends to determine whether you require a flow meter or flow switch. If the flow varies, a **flow meter** is required to detect and report on the flow coming into the unit. Make sure that there are to be **no** branches on or off the pipes between the flow meter and the Unit inlet. If the flow rate is static, a **flow switch** can be used instead.

3.1.4 Application

- Verify that the dose-related parameters, such as the UVT and the flow, are the same as those defined in the Atlantium application scope of supply.
- Determine what a low flow situation means to your process and whether you need to shut down the Unit (low flow indicates upstream problems) or recirculate (low flow normal) when the flow goes below the normal range.
- For systems that include TRACS identify the locations for the **TRACS** operational and viewer computer stations. Consider a place that is conveniently accessible when checking system operations but protected from environmental factors

3.2 Typical Installation Set-Up

Use the diagrams below as a general basis for your installation drawings. Be sure to include service access as you fit the Atlantium system into your facility (i.e., nearby pipes, electrical fixtures, support beams, etc.)

Below are two typical installation setups:

- Typical Atlantium System Setup without Bypass
- Typical Atlantium System Setup with Bypass

For information about adapting the installation to your facilities and your industry needs, contact your Atlantium representative.

Typical Atlantium System Setup (No Bypass)

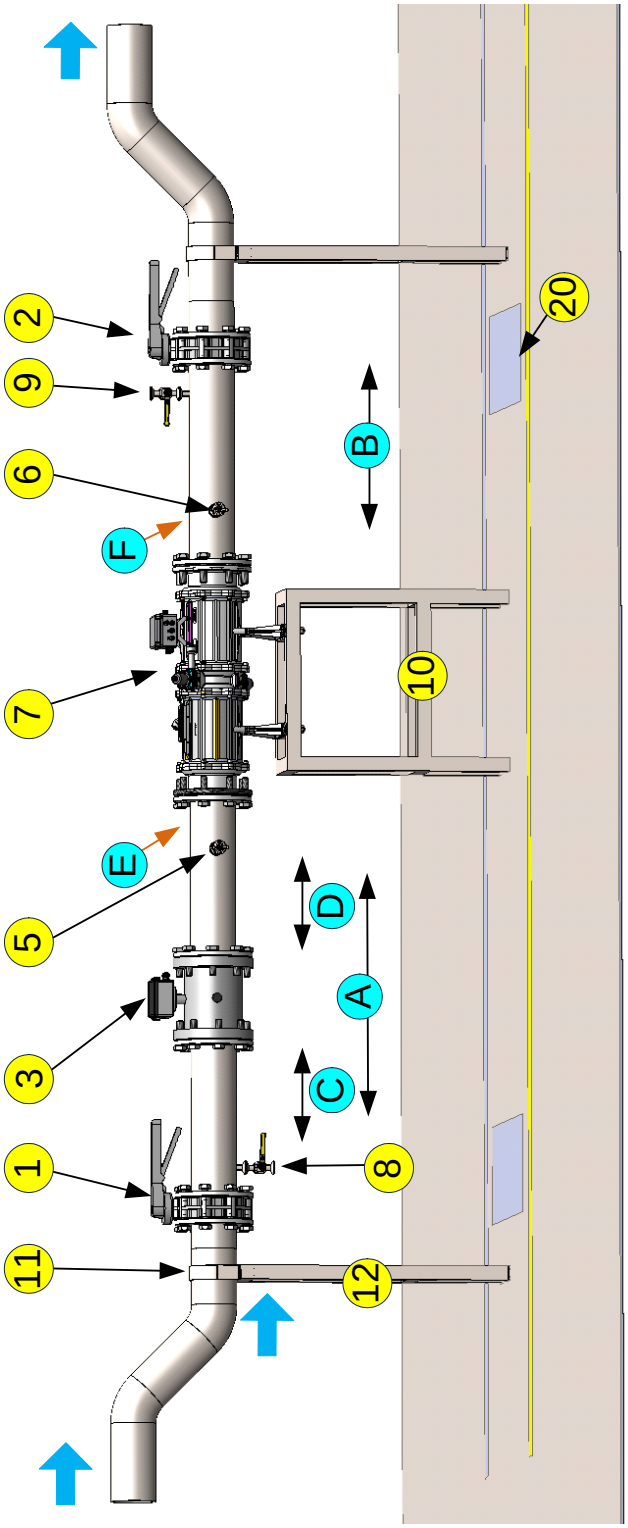

Figure 3-1: Typical Atlantium System (no Bypass)

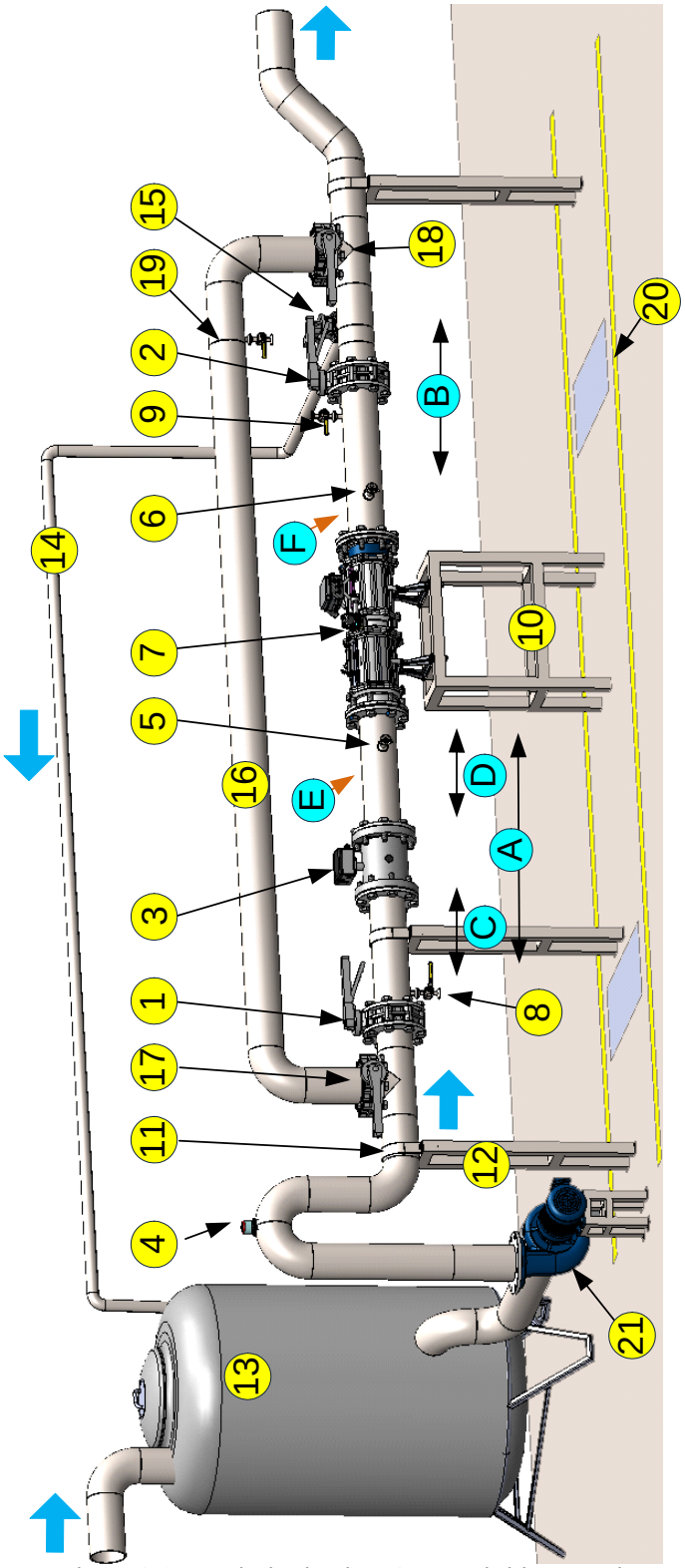

Figure 3-2: Typical Atlantium System (with Bypass)

Table 3-1: Typical Atlantium System Component Setup Key

#	Description		Atlantium P/N or recommended and available at Atlantium
	Direction of water flow in the pipes		-
1	Inlet isolation Valve ■ Isolating Valve on the Inlet side		-
2	Outlet isolation Valve ■ Isolating Valve on the Outlet side		-
3	■ Flow Meter flow measurement device with 4-20mA analogue output signal ■ To be installed on the same line as the Atlantium system, with no branching before or after the flow meter ■ Follow the manufacturer's Installation instructions	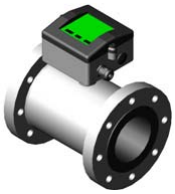	Available Flow Meters: KROHNE OPTIFLUX 6000 KROHNE OPTIFLUX 2300
4	Air Release valve - To prevent air bubbles where necessary ■ Automatic Air Release valve is used to release air bubbles trapped within the line ■ Install at a high position to allow air bubbles to accumulate and release from this point		-
5/6	Inlet/Outlet Sampling Points ■ Position aseptic sampling valves **horizontally** (90^0) on the pipe center, within 50cm of the Unit ■ Aseptic sampling valve must be a dedicated valve for sampling only and resistant to alcohol and flame		■ Aseptic Sampling Valve Kit for Stainless Steel Pipe - KTB005700 ■ Aseptic Sampling Valve Kit for Plastic Pipe - KTB0011500
7	Generic Atlantium Unit		-
8	Draining/CIP Port - For performing CIP on the Atlantium Unit ■ The Draining port should be positioned close to the Inlet valve and between that and the Unit, ***on the bottom*** of the pipe ■ It is also used as one of the CIP ports and connects to a hose ■	 	■ CIP Kit - SAB012900 ■ CIP Valve Kit for Stainless Steel - KT0011600 ■ CIP Valve Kit for Plastic - KT0011700 (the valve itself is not part of the kits) See ***CIP Ports and CIP Kits*** on page **3-17.**, for information on CIP equipment.
9	CIP Port - For performing CIP on the Atlantium Unit ■ The CIP port should be positioned between the Unit and the Outlet valve, ***on top*** of the pipe, at the ***highest*** point before the isolation valve, in order to allow the pipes to be completely filled with solution		

Table 3-1: Typical Atlantium System Component Setup Key

#	Description		Atlantium P/N or recommended and available at Atlantium
10	System Supports ■ Supports are required to assure no mechanical stress on the Atlantium Unit		-
11	Support brackets ■ Brackets are used to hold the Atlantium Unit and pipes attached to the support mounts ■ Is to include internal flexible material to absorb vibrations and assure that the pipes and Atlantium Unit are mounted tightly and securely		-
12	Pipe Supports ■ Pipe Supports are required to assure no vibrations in the pipeline	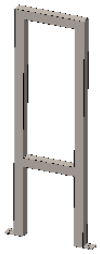	-
13	Water tank		-
14	Recirculation Line >5m3/h (>20gpm (Optional) ■ A Recirculation line is highly recommended to keep water flowing constantly, thereby assure a high disinfection level		-
15	Recirculation Line Isolation valve (Optional)		-
16	By-Pass (Optional) ■ If the facility uses quartz corrosive CIP chemicals, such as caustic soda, use a By-Pass line to prevent damage to the Atlantium Unit		-

Table 3-1: Typical Atlantium System Component Setup Key

#	Description		Atlantium P/N or recommended and available at Atlantium
17	By-Pass Inlet isolation Valve (Optional)		-
18	By-Pass Outlet isolation Valve (Optional)		-
19	By-pass draining port (Optional) ■ The Draining port should be positioned on the bypass line, at the lowest point of the pipe	 	-
20	Drain ■ It is recommended to install a drain close to the draining valve		-

Table 3-2: Typical Atlantium System Distances Setup Key

#	Description
A	Minimum 10D (3000mm/ 118inch) of straight horizontal pipe between the Inlet isolation valve and the Atlantium Unit (For sites with space constraints, consult an Atlantium Application Engineer to find appropriate solutions.)
B	Minimum 5D (1500mm/59inch) of straight horizontal pipe between the Atlantium Unit and the Outlet isolation valve (For sites with space constraints, consult an Atlantium Application Engineer to find appropriate solutions.)
C	Some manufacturers require positioning the Flow Meter at a minimum of 5D (mm/inch) of straight horizontal pipe immediately preceding it on the Inlet side. Refer to the manufacturer's instructions.
D	Some manufacturers require positioning the Flow Meter at a minimum of 2D (600mm/24inch) of straight horizontal pipe immediately following it before the Atlantium Unit. Refer to the manufacturer's instructions.
E	Position the Inlet Sampling Point Maximum Distance from the Atlantium System Inlet .5 meters/1.5ft.
F	Position the Outlet Sampling Point Maximum Distance from the Atlantium System Outlet .5 meters/1.5ft.

3.3 Electrical Requirements

The electrical infrastructure is to be installed and in place prior to the system's delivery.

For information on the footprint of the components of the Atlantium system, see the section, ***About the RZ300 System*** on page **2-1**. Use the diagrams below to help you plan the electrical infrastructure. See also on page **2-6** .

Take into account:

- Evaluate the quality of your power and the likelihood of blackout/brownouts, electrical surges or interruptions. Determine which power surge protection and uninterrupted power supply you may need. See ***Electrical Usage*** on page **2-6.**
- To verify that you order the correct lengths for cables (i.e., Cable Harness, power cables, data cable, etc.), measure the distance between the proposed location of the relevant Atlantium components and between them and the Power source.
  - Planning the placement of the Ballast Modules, Controller and the path of the various cables must take into consideration the length of the **Cable Harness** and the other cables. Cables must be placed in a path that does not interfere with passage ways.
  - The power mains connections must be in the vicinity of the Ballast Modules, Controller.
  - The power cable and connecting plug are to be obtained locally.
- If your region experience periodic power outages, consider including uninterrupted surge protection devices.
- Prepare cables of sufficient length to connect from the auxiliary equipment (i.e., the flow meter/flow switch, etc.) to the Atlantium system.
- See ***Preparing for the Electrical Wiring to the Mains*** on page **3-11.**

3.3.1 Typical Atlantium System Cabling Diagram

The following diagrams provide the typical Atlantium System Cabling schematics according to the local electricity options. These diagrams are samples only. Refer to the Cabling and installation diagrams provided specifically for your facility. The key to the system cable follows after the diagrams in **Table 3-3** on page **3-11**.

Typical Atlantium System Cabling Schematics

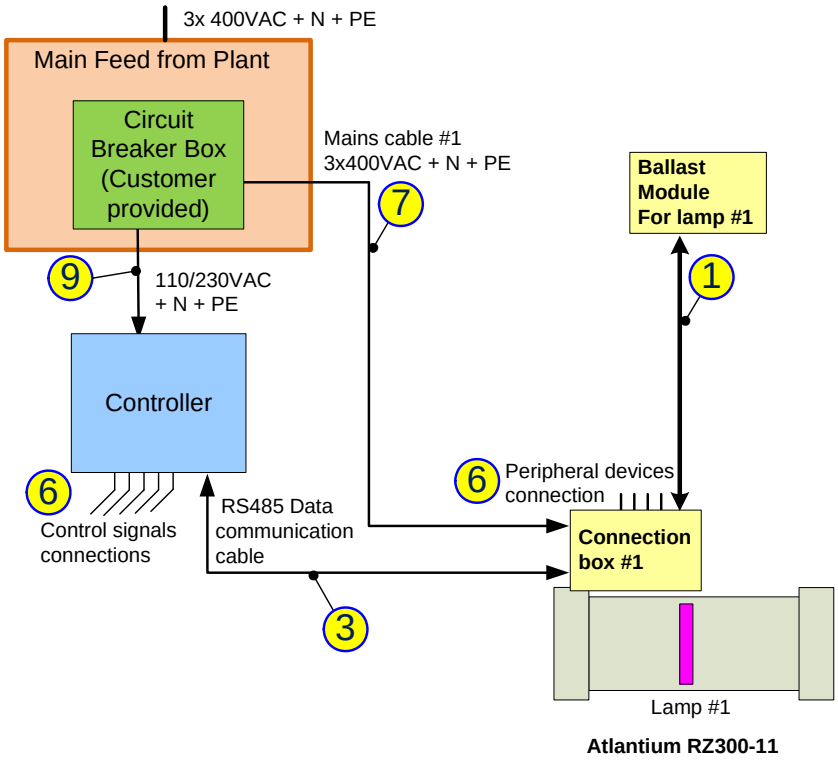

T

Figure 3-3: Typical Cabling Schematics for the Atlantium System for **RZ300-11**

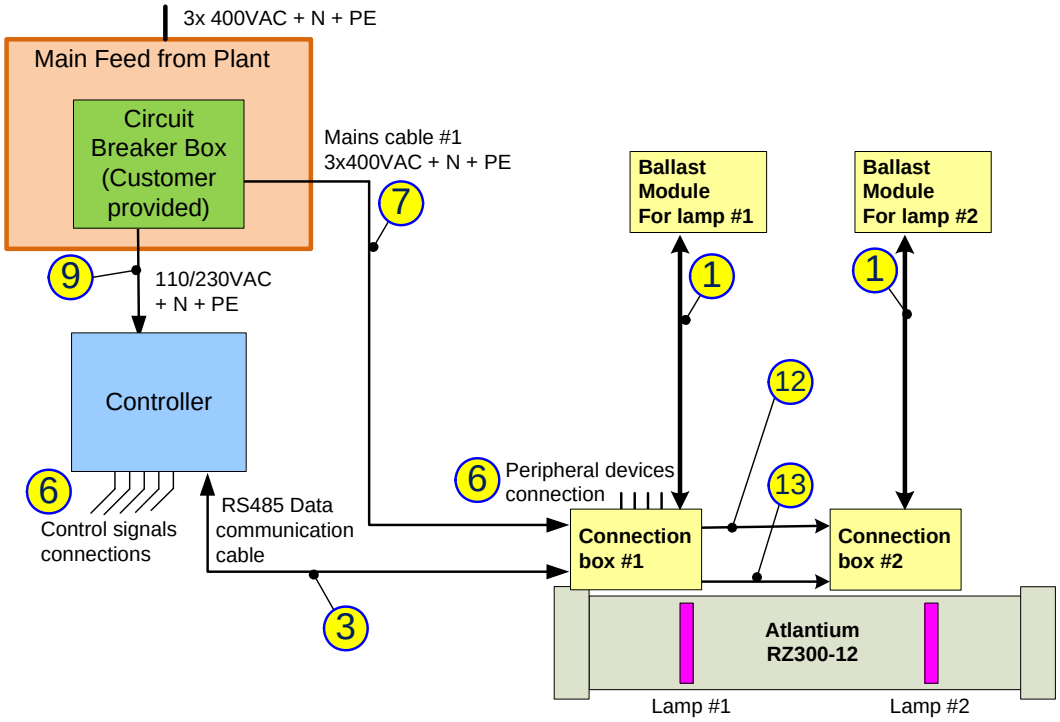

T

Figure 3-4: Typical Cabling Schematics for the Atlantium System for **RZ300-12**

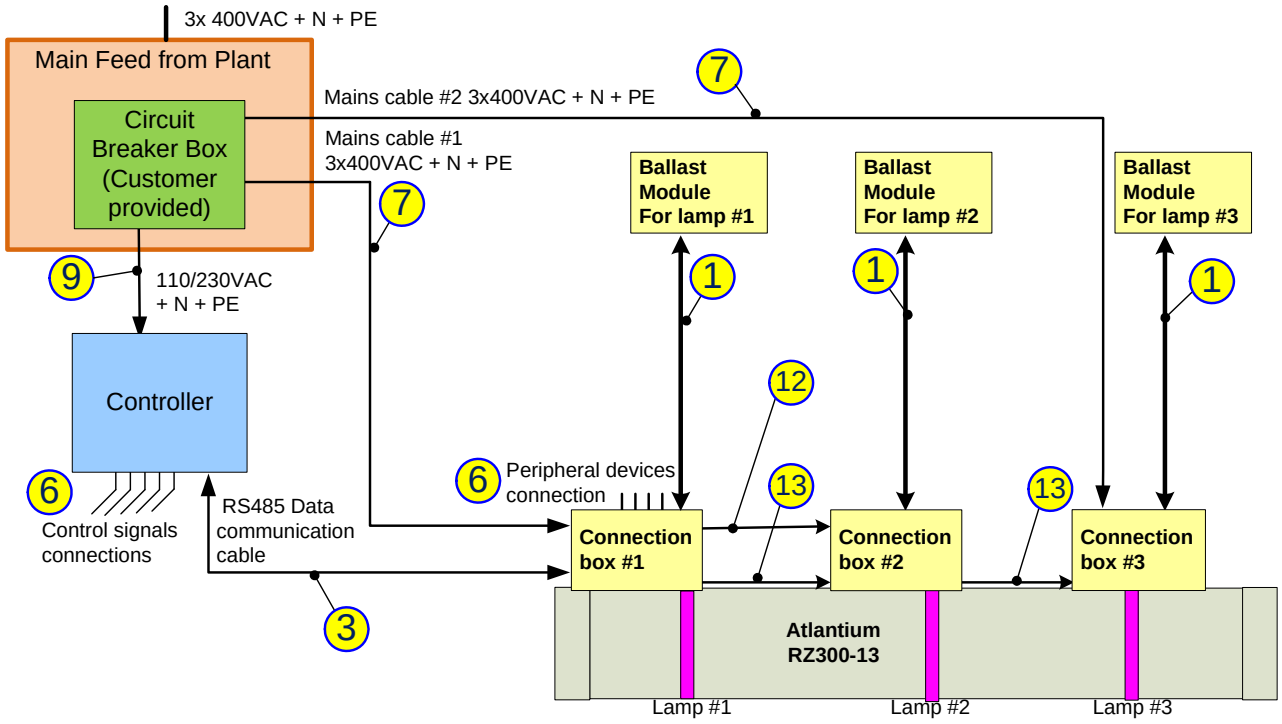

Figure 3-5: Typical Cabling Schematics for the Atlantium System with for **RZ300-13**

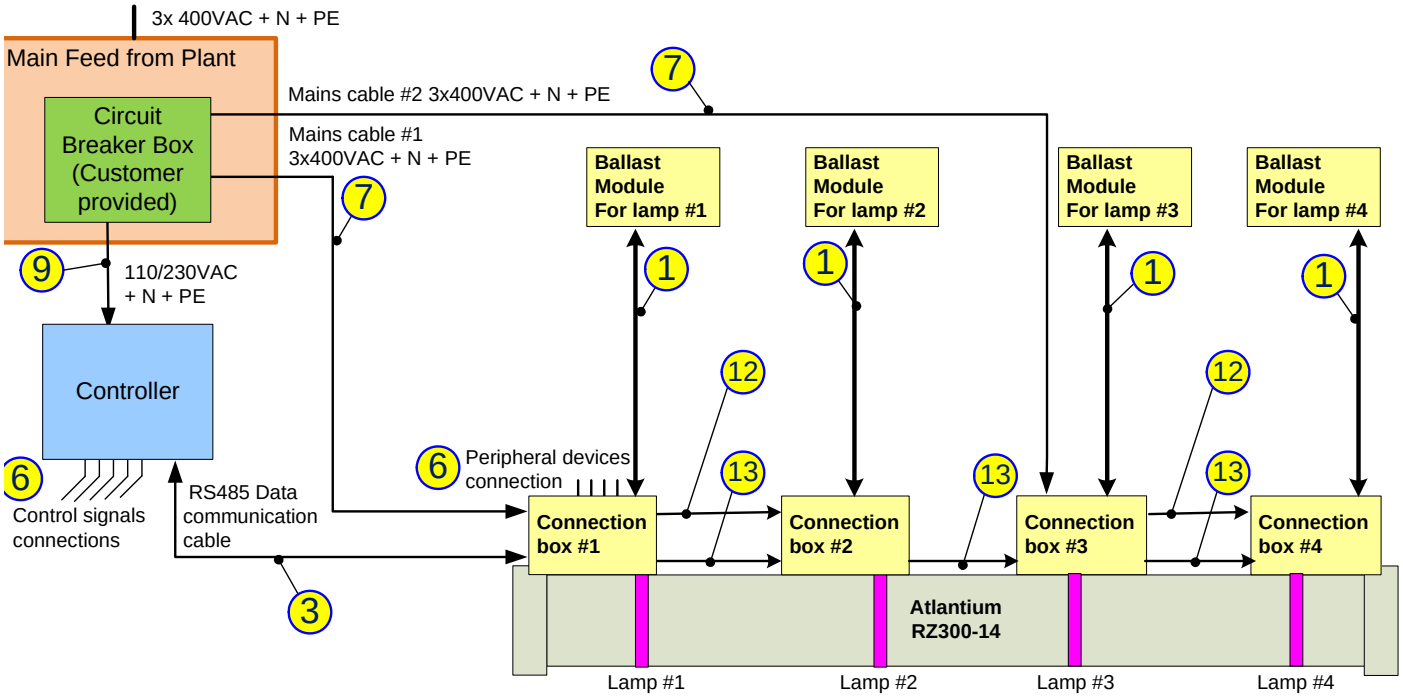

Figure 3-6: Typical Cabling Schematics for the Atlantium System for **RZ300-14**

If you require longer cables than those Atlantium provides, or need to replace cables, the table below contains the specifications for all Atlantium system cables.

Table 3-3: Key to System Cables

	Item	Sizes	Cat. No.	Description	Supplied by
1	Wiring Harness	5m/16.4ft. 10m/32.8ft.	HSL015500 HSL15400	Bundle	Atlantium
2	48VDC Module power cable	10m/32.8ft.	HSL015600	Power cable to the 48 VDC Module 2x1.0mm, 300V, HO5RR	Atlantium
3 /4	**Controller** RS485 Data communication cable	5m/16.4ft.	HSL013200	Shielded twisted pair, 22AWG, 300V(General cables C0720A)	Atlantium
6	Cables for control signal connections and peripheral device connections				Customer
7	Power Cable to the Mains	5m/16.4ft. 10m/32.8ft.	HSL013300 HSL014400	5-wire flexible cable of 4mm^2 each, 600V, HO7 RN-F 5x4 (Lapp, P/N 16001303)	Atlantium
8	48VDC Module power cable to the mains	2m/6.56ft.	HSL013800	3-wire 19AWG flexible cable of 0.75mm^{2}each, 600V. HO5 RR-F 3G.075	Atlantium
9	**Controller** Power Cable to the Mains	1.6m/5.3ft.	HSL011600	3-wire 16AWG + Shield flexible cable of 0.75mm^{2}each, 500V. HO5 RR-F 3G.075 (Lapp, P/N 600207)	Atlantium
1 1	Power Module power cable to the mains			According to local regulations	Customer
1 2	Power cables		HSL014200	Factory-installed Power cables, daisy chains all Connection Boxes	Atlantium
1 3	RS485 Data communications cables		HSL012500	Factory-installed Data communications cables, daisy chains all Connection Boxes	Atlantium
1 4	48VDC Module power cable		HSL015700	Factory-installed 48VDC power cable, daisy chains all Connection Boxes	Atlantium

3.3.2 Preparing for the Electrical Wiring to the Mains

You must prepare the following elements for connecting the Atlantium system to the mains:

- Mains system area circuit breaker according to the total systems' power consumption to be connected to this line. See ***Electrical Usage*** on page **2-6.**
- Plan to include surge protection and possibly an Over Voltage Protection Device (OVPD) (available from Atlantium) if needed. See ***Surge Protection*** on page **2-7.**
- Circuit breakers per Atlantium system installed and terminal blocks for N, PE. See the diagrams below.
- If you intend to lengthen or replace the mains power cable connected to the Atlantium Unit with a longer cable, prepare the cables according to your location electrical distribution system requirements.

  For locations with 400 VAC: 5-wire system that contains 3 phases, Neutral and Ground (The Neutral and Ground are mandatory)

Use the diagrams below as relevant for preparing for the connections to the Mains. These diagrams are samples only. Refer to the Electrical wiring and installation diagrams provided specifically for your facility.

Typical System Wiring Diagrams

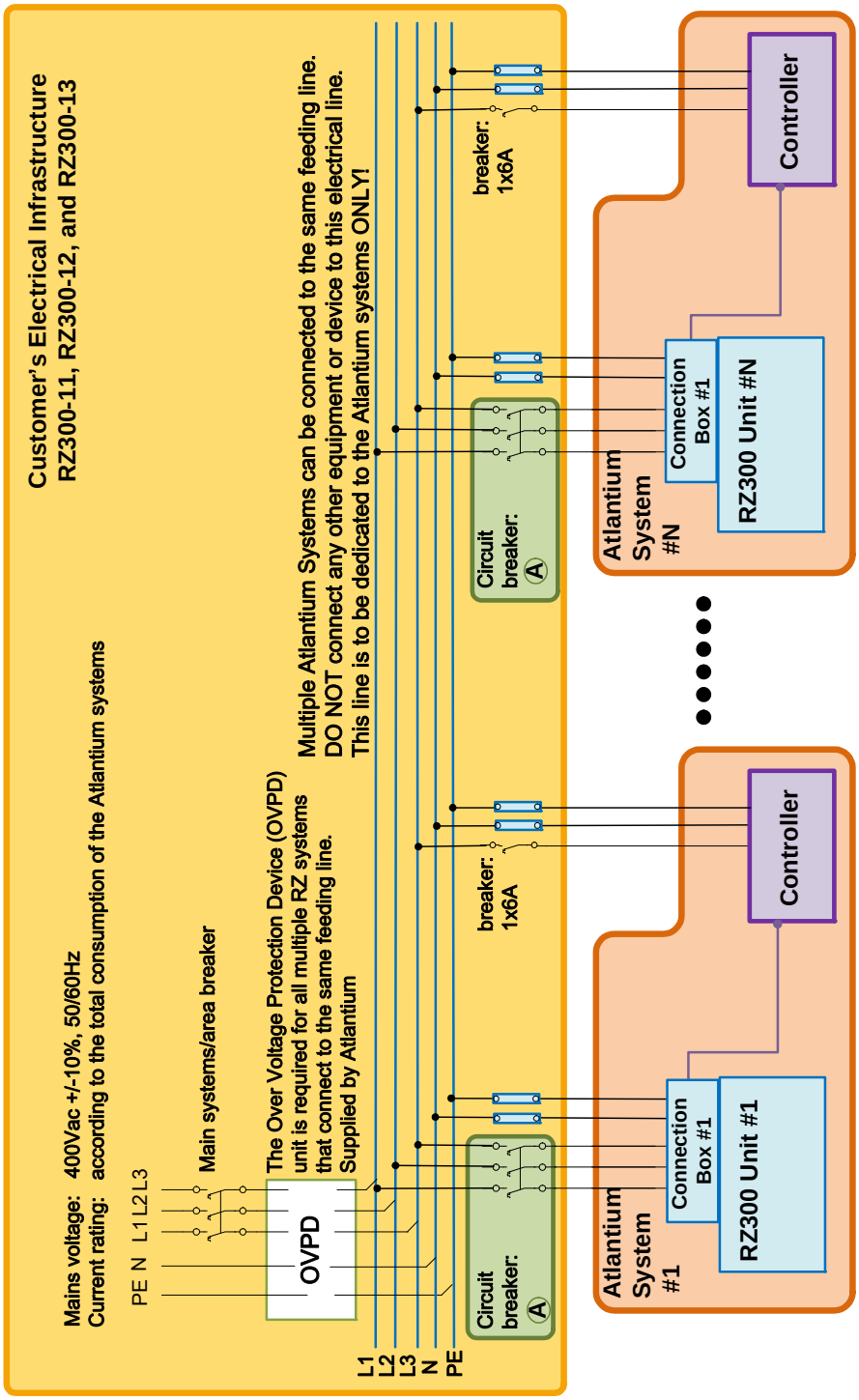

Figure 3-7: Typical **RZ300-11/12** System Connections to the Mains for Locations with 400VAC

(A) For local voltage requirement regarding the circuit breaker, see on page **2-6**

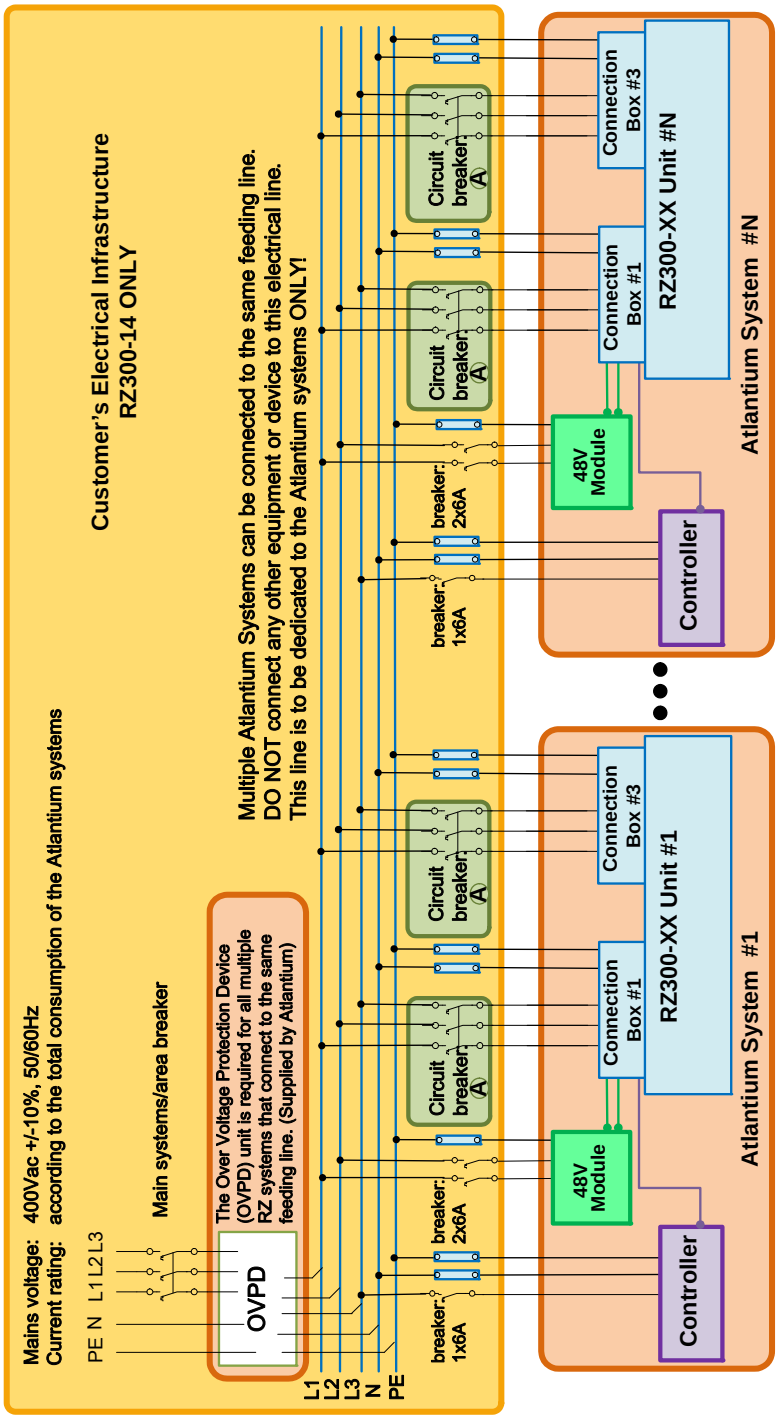

Figure 3-8: Typical **RZ300-13/14** System Connections to the Mains for Locations with 400VAC

3.4 The Piping Infrastructure

To review how+ to prepare the infrastructure, read through the typical installation section before you begin and refer to the section, ***About the RZ300 System*** on page 2-1.

Install the piping infrastructure before the Atlantium system arrives, but to avoid built-in mechanical stresses perform the final pipe adaptations and welds when the unit is actually situated in its permanent position.

- When sealing the flanges/ferrules and gaskets, **do not** use sealing material that contains graphite as it accelerates the corrosive process on stainless-steel components, including those of the Atlantium system.
- Be sure to align the piping on the inlet and outlet sides of the designated location for the Atlantium Unit with the unit to avoid mechanical stress on the Unit.
- Be sure to secure the piping around the designated location for the Atlantium Unit so that there is no vibration.
- Be sure to position adequate supports on the piping line needed to hold up and stabilize the process piping on the inlet and outlet side of the proposed location of the Atlantium unit.
- Determination of support requirements and design should be made by an on-site mechanical engineer.

3.5 Flow Measurement/Detection

The Atlantium unit requires a flow signal to calculate the dose and operate properly. The flow signal is a measurement of the actual flow or simply a flow/no-flow indicator. The flow signal is collected from either a flow meter or a flow switch.

- A flow meter is required in facilities where the flow rate is variable for any reason.
- A Flow switch can be used in facilities where the flow is at a fixed, steady rate.

The Flow meter or flow switch does not necessarily have to be installed in close proximity to the Atlantium Unit. It may be more remotely positioned, provided that it is located on the inlet side between it and the Unit and there is **no** branching or splits of the water flow.

The Atlantium system cannot be operated when there is no water or no water flow. Any damage caused due to operating the system without water or without water flow invalidates the Atlantium warranty.

Flow Meter

In most cases, a flow meter with a 4-20 mA output is required to measure the flow and automatically adjust the output of the UV system. The flow meter must be able to measure the expected maximum water flow of the specified Atlantium unit. The power source for the flow meter must come from an external source according to the manufacturer's instructions.

Be sure to provide the power source for the flow meter as part of the preparations for installing the Atlantium Unit.

Install the flow meter in strict accordance with the instructions supplied by its manufacturer.

Flow meters are available from Atlantium, such as:

- **KROHNE OPTIFLUX 6000** flow meter for high-purity water applications
- **KROHNE OPTIFLUX 2300** flow meter – OPTIFLUX 2000 flow meter, includes **KROHNE IFC 300** signal converter

Consult your Atlantium representative.

Figure 3-9: KROHNE OPTIFLUX Flow Meters

Flow Switch

The flow switch tells the Atlantium Unit when water is or is not flowing. The recommended flow switch is Dry Contact with minimum flow sensing of 0.2m^3/hr (1gpm).

Install it in a vertical (12:00 o'clock) orientation on top of the pipe. Follow the manufacturer's instructions.

Figure 3-10: Examples of Flow Switch

3.6 Sampling Valves

Locate the Sampling valve indoors in a clean environment out of range from direct contact with fans or A/C air flow.

Sampling valves require internal treatment with alcohol, as well as treated with flame. Make sure you allow ample space for these actions. See ***Taking Microbial Samples*** on page **10-4.** for more information. The Sampling valve should be located indoors in clean environment without away from direct contact with fan or A/C air flow.

- **For Stainless Steel. Pipes:**
  - Weld the 1 inch clamp fitting at a horizontal orientation (3 or 9 o'clock).
  - Perform a polishing process to achieve a smooth area on the external and internal part of the pipes.
  - Passivate the pipes to avoid corrosion.
- **For Plastic Pipes:**
  - Thread the clamp fitting to the port.
- On the inlet and outlet sides of the water line, connect the aseptic sampling valves, using the supplied 1" tri-clamp fitting, to any 1 inch tri-clamp fitted port.

3.7 Sampling Valve Components and Kits

Sampling valve kits are available from Atlantium. The table below details them. For information on installing the Sampling valves, see ***Installing the Inlet/Outlet Sampling Points*** on page **5-3**.

One Accessory kit is required for each Sampling point.

Table 3-4: Sampling Valve Components and Kits

Description	Image	Catalog number	Kit for Stainless Steel Pipe KTB005700	Kit for Plastic Pipe KT0011500
Long welding ferrule – for welding the tri-clamp port to the pipe		FAC003700	X	-
Threaded Male Adapter 1/2" BSP – for connecting the tri clamp port to the plastic pipe		FAB008100	-	X
Aseptic sampling valve		COB000500	X	X
Gasket 1" – for sealing the valve connected to the pipe		FA0000046	X	X
Clamp 1.5" – for connecting the valve to the welded port		FA0000045	X	X
Gasket 1/2" – for sealing the valve's flushing port		FA0000048	X	X
Clamp 1/2" – for sealing the flushing port of the valve		FA00000047	X	X
End cap 1/2" – for covering the valve's flushing port		FA0000049	X	X
Round brush – for cleaning the valve during the CIP process		FA0008300	X	X

3.8 Draining Valves

It is important to plan for draining the system. Install one draining valve at the lowest point of the pipeline, before or after the Atlantium unit. If you plan to install CIP ports, one of them can double as a draining valve. If there is a Bypass line used occasionally to bypass the Unit in any circumstance, add an additional draining valve to assure that the bypass line does become a potential source of standing water. A bypass line must be empty when not in use.

3.9 CIP Ports and CIP Kits

The CIP (Cleaning-In-Place) recirculation system is used for the periodic cleaning and sterilization process of the Atlantium unit's inner surfaces and quartz tube. The CIP Kit, Catalog number: SAB012900, includes the CIP Cart with 1 water reservoir and a pump, capable of pumping up to 4 cubic meters per hour. It includes a supply hose: ID 0.75" / 19mm (5 meters / 15 feet long) and a return hose: ID 0.75" / 19mm (5 meters / 15 feet long) and pocket to hold these hoses. See the diagram below.

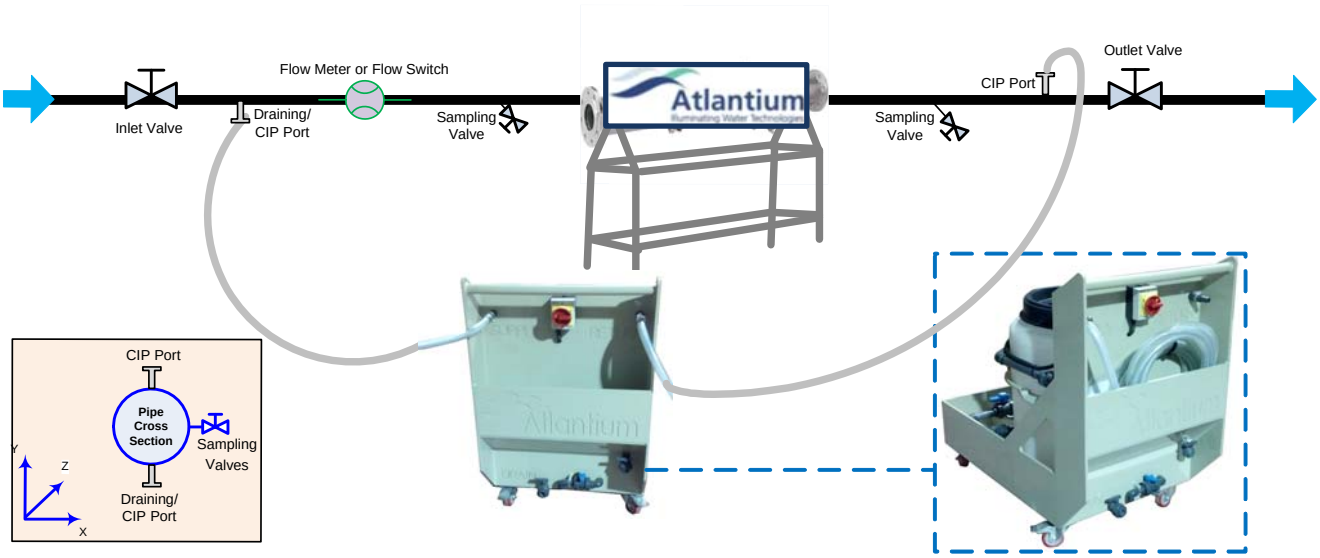

Figure 3-11: CIP Recirculation System Connections

CIP Accessories and Kits Available from Atlantium

One Accessory kit is required for each CIP port.

Table 3-5: CIP Accessory Kits

Description	Image	Catalog number	Kit for Stainless Steel Pipe KT0011600	Kit for Plastic Pipe KT0011700
Long welding ferrule – for welding the tri-clamp port to the pipe		FAC003700	X	-
Threaded Male Adapter 1/2" BSP – for connecting the tri clamp port to the plastic pipe		FAB008100	-	X
Gasket 1" – for sealing the valve connected to the pipe		FA0000046	X	X
Hose Adaptor 1" - to attach the CIP hose		FAB005700	X	X
Clamp 1.5" – for connecting the valve to the welded port		FA0000045	X	X
End cap 1.5" – covering the CIP port while not in use		FAC004100	X	X

CIP Safety Devices

Required but not included in Atlantium's CIP Kits: protective devices such as goggles, clothing and gloves (chemical-safe) according to the specified safety standards at your facility.

- The chemicals selected and the concentrations used must be approved for use by the facility's quality assurance and safety officials, and must comply with the written protocols and procedures set in place by those departments.
- Use protective chemical-safe goggles, clothing and gloves
- Use and handle in strict accordance with their manufacturer's instructions, product information sheets, and material safety data sheets (MSDS).
- It is strictly forbidden to use of NaOH (Caustic Soda) as it causes irreversible damage to the quartz. Any use of this material requires an analysis of temperatures, concentration, frequency and duration and written approval from Atlantium's application engineer.

3.10 Connection to Facility Control

Options are available to set up control of the Atlantium system via your facility control system. Control setup can be made via any of the following:

- **Modbus** - RTU on RS485 (network) serial connection directly to the Facility control (**Appendix A**, ***Modbus Communication Protocol***)
- **Dedicated computer station** - Ethernet Lan or wireless (TCP/IP) with **TRAC Software** installation for constant system monitoring and data logging - available upon purchase of license (See below)
- **Signal control** - utilizing System Ready, External On/Off, and General Alarm functions, etc. (See ***Cabling Components*** on page **5-20.**)

With any of the above control options, you can still utilize the function of the controller of the Atlantium system. Whichever control facility is utilized, the system communicates to the other control systems such that the last command issued determines the current status.

Minimum System Requirements

A computer designated for use with **TRACS** requires the following:

Operating System:

- Windows 7 (32, 64 bit)
- Windows XP Home (32 bit)
- Windows XP Professional (32 bit)

Processor:

- 1 GHz for Windows XP
- 2 GHz for Windows 7

RAM:

- 2GB Minimum
- 4GB on Windows 7 recommended

Disk Space:

- 2 GB for installation
- 50 GB or more free

Peripherals

- CD Rom Drive
- Free USB port

3.10.1 System On-Site Connections

The **TRACS Operating** computer may be connected via direct connection or via Ethernet LAN, or from a remote location outside the facility using the Internet. The **TRACS Viewer** computer is typically placed at a remote location inside or outside the facility using the Internet.

Table 3-6: System On-Site Connections

#	Item
1	Controller
2	CAT-5 Cable with RJ-45 Male Connector
3	RJ-45 Female Jack
4	PC with **TRACS** installed
5	CAT-5 Cable with RJ-45 Male Connector
6	RJ-45 Female Jack
7	CAT-5 Ethernet Cable
#	**Maximum Cable Lengths**
A	Up to 50 meters (54 yards)
B	5 meters (16.5”)
C	3 meters (10”)

Figure 3-12: TRACS Layout Diagram

Prepare Ethernet connection ports and cables (at the required lengths - cables are not supplied by Atlantium), IP addresses, as well as the all other computer equipment.

To set up the **TRAC Software** installation n-site (within the facility), the maximal length of the direct-line data cable between the computer and the system must be no longer than 50 meters (54 yards) - the total A+B+C (in the figure above equals less than 50 meters (54 yards).

To set up the **TRAC Software** installation and enable communications from farther away than 50 meters (54 yards), signal boosters should be employed.

If the computer is to be set up off-site (different building; different city, etc.), communications between the system and the **TRAC Software**, Broadband Internet service is required. This must be set up by your on-site IT personnel.

To be certain that your plans cover fully the needs of the Atlantium system requirements, consult with Atlantium's Application Engineer before you finalize your plans.

3.10.2 TRACS Backup Requirements

For systems with **TRACS**, the database is to be backed up on a monthly basis (typically 250 MB). The backup file is generally saved to the computer on which the **TRACS** is running and is then copied to an external, safeguarded location. This backup mechanism is to be ready before the Atlantium System is operational. Consult your IT department. For information on the **TRACS** settings for backup, see ***Configuring the Basic System Settings*** on page **8-6**. For information on the Backup procedure, see ***Backing up the TRACS Database*** on page **10-6**.

4 Safety Overview

The Atlantium **RZ300 Series** Hdro-Optic Water Disinfection system has been designed according to the highest safety standards, assuring the safety of operating personnel, the environment and the treated water.

WARNING!

Improper use of controls or adjustments or performance of procedures other than those specified herein could result in significant hazards.

Therefore, personnel operating or servicing this system must be thoroughly familiar with all safety requirements and operating procedures and are to adhere to them during use of this system.

To guard against injury, observe basic safety precautions, including the following:

All persons operating the Atlantium system must be aware of proper use and the potential hazards of violating safeguards. Be certain that all personnel carefully review the safety information and the procedures specified in this manual. Only authorized individuals with appropriate training and knowledge, including local regulations, should operate, assist in the operation of or provide maintenance to the system.

All service and repair of the Atlantium system must be performed by Atlantium field service technicians or other factory-authorized personnel ONLY.

4.1 UV Lamp Safety

UV Exposure: The system generates ultraviolet (UV) light within the Unit, which can cause serious eye damage or blindness if you stare at it directly when it is working. Use the Viewport only. Do not look directly into the lamp enclosure during system operation, examining, or servicing the system's internal components during operation, or when lamps's caps are open, or if energized testing is required.

If the viewport is broken, DO NOT look directly into it. Be sure to request a replacement part immediately. Do not open the viewport's metal cover until the replacement is installed.

Persons potentially subject to UV light exposure – technicians who are servicing the Unit – must wear appropriate eye protection whenever the system is operating.

The Viewport is specifically designed with a UV filter to prevent UV light from escaping so it is safe to look inside. Nevertheless, personnel should not stare at it or any other brilliant light source for any but short intervals to check on Unit operations. The Viewport cover should also be preserved intact.

During maintenance procedures that are conducted with the UV lamps turned on:

- **Use Caution floor signs at a distance of 1m/40inch from the Atlantium Unit to warn passersby against possible UV light exposure and not to approach without proper eye and skin protection.**
- Wear white cotton gloves.
- Wear long sleeves rolled down to your wrist.
- Wear appropriate eye protection, such as containing polycarbonate lens that meet EN166, CAN/CSA-Z94.3-02 and/ or Z87.1 standards.
- **DO NOT look directly into openings that emit UV light.**

Protect Hands: **Do not touch the UV lamp with bare hands.**

Wait at least 10 minutes until the lamp is cooled down before touching the lamp or starting the replacement procedure.

Use appropriate protective gloves both to protect your hands and to avoid skin oils that leave fingerprints and/or harm the UV lamp.

Lamps can reach a temperature of 1,000C° under operating conditions.

Wait ten minutes to allow the lamp to cool down fully before replacing it.

Keep materials that are sensitive to heat, or which contain solvents, a safe distance away from the lamp, Unit, and electrical connections.

Electric Shock: **Before replacing a UV lamp or other components, and during any maintenance requiring lamps to be turned off, make sure the switches on the Connection Boxes of the relevant lamps are turned OFF and place a sign on the Atlantium Unit and Controller alerting others NOT to touch the switches or the screen during maintenance so that no one can inadvertently turn it on while maintenance is in progress.**

Prevent Damage: **Handle the UV lamp assembly by holding only the contact housings (white ceramic casing).**

When handling the UV lamp, always place it on a flat surface or table, so that it is not accidentally damaged.

If the body of the UV lamp is touched accidentally, clean the fingerprints off with alcohol (at least 70%) and wipe dry with a soft, clean, lint-free cloth (usually provided with the lamp). Do not use cleaning rags or materials that can leave a residue.

Do not use a UV lamp that shows any scratches, cracks, or other damage.

Mercury Poisoning: **Lamps contain mercury, which is a hazardous substance. Always wear gloves and safety glasses when handling or replacing a UV lamp.**

Inhalation of vaporized mercury compounds can be harmful to the lungs, kidneys, and nervous system. Mercury that penetrates the skin or is ingested can also be harmful.

If mercury is inhaled, penetrates the skin, or is ingested accidentally, seek emergency medical treatment immediately.

If a UV lamp brakes during handling and releases mercury, the following precautions should be observed to minimize the risk of exposure to mercury:

- Always wear gloves and safety glasses when handling or replacing a UV lamp.
- Leave the area immediately to avoid inhalation of the mercury vapor.
- Thoroughly ventilate the area for at least 30 minutes or until the mercury vapor concentration is in compliance with applicable federal and local health and safety regulations.
- After handling a broken UV lamp, carefully remove gloves, and then wash hands thoroughly with soap and water. Follow all applicable federal and local health, safety, and environmental regulations.
- Do not turn on or operate the system until all mercury contamination has been cleaned up and removed.
- Establish a Hazard Response Plan to deal with all related hazards and provide it to all personnel associated with the Atlantium system.

Refer the Chemical Safety information at: http://www.inchem.org/documents/icsc/icsc/eics0056.htm

Lamp Compatibility: Use original Atlantium UV lamps ONLY. **Other lamps are incompatible.** They **void the warranty** and may damage the system.

Proper Disposal: **Expired lamps are classified as hazardous waste and must be disposed of appropriately.**

- A non-ruptured UV lamp that is no longer used must be disposed of according to specific local or federal environmental and hazardous waste regulations.
- Broken lamps and parts contaminated by the mercury have to be vacuum-packed and disposed of. Broken lamps, as well as contaminated packing material and other parts have to be considered as special waste, which may only be removed by authorized waste disposal companies.

4.2 Electrical Hazards and Safety Considerations

WARNING!!!

UNDER NO CIRCUMSTANCES
SHALL ELECTRICAL WORK BE CARRIED OUT WITHOUT VERIFYING THAT ALL MAIN CIRCUIT BREAKERS Of THE ELECTRICAL LINE FEEDING THE ATLANTIUM SYSTEM COMPONENTS ARE SET TO THE OFF POSITION AND THAT NO ELECTICAL FEED IS LIVE.

DO NOT SET ANY MAIN CIRCUIT BREAKER OF THE ELECTRICAL LINES FEEDING THE ATLANTIUM SYSTEM COMPONENTS TO THE ON POSITION UNTIL ALL ELECTRICAL WIRING IS PROPERLY CONNECTED. UNCONNECTED WIRES/CABLES IN A LIVE ELECTRICAL FEED IS A HAZARDOUS SITUATION THAT CAN RESULT IN DEATH OR SERIOUS INJURY.

- **DO NOT DRILL INTO THE CONNECTION BOXES OR ALTER THEM IN ANY WAY!!!!**
- **The Connection Box already contains entry glands for ALL of the cabling needs.**
- **Making holes in a Connection Box will destroy its waterproof seal, endangering the components inside.**
- **Do Not draw electricity from the Atlantium Unit's Connection Box as it will damage the Unit's electrical configuration.**

The Atlantium Hydro-Optic Water Disinfection system incorporates high-voltage internal components, which can cause serious injury or fatal electrical shock if not used or serviced properly. High voltage components can retain a charge for some period of time even after the system has been turned off.

- Never attempt to remove any system covers or to dismantle any parts, except when performing the maintenance procedures detailed in ***System Maintenance*** on page 10-1.
- No portion of the Atlantium system is be opened or removed by anyone other than a trained and authorized technician.
- Do not spray or pour any type of fluid directly into the Unit or electrical components. Moisture causes damage to the equipment and electrical shock may result.
- Do not operate the system if the power cables or harnesses are frayed or otherwise damaged.

DO NOT enter **Technician Mode** in the **Controller** unless instructed to do so by Atlantium certified personnel or by an Atlantium System User Manual. for a specific task.

If you are in Technician Mode, **DO NOT WALK AWAY!**

NEVER LEAVE THE ATLANTIIUM SYSTEM WHEN IT IS OPERATING IN TECHNICIAN MODE!!
A SYSTEM LEFT IN TECHNICIAN MODE WITHOUT SUPERVISION CAN RESULT IN PERMANENT DAMAGE!!

Utilize best practices regarding electrostatic discharge (ESD).

Avoid direct contact with the electronic circuit boards of the **Controller,** which is sensitive to electrostatic discharge (ESD).

Wear an electrostatic discharge (ESD) Wrist Strap when performing procedures where contact with a circuit board is possible.

4.3 Keep the Unit Full of Water

The Atlantium system cannot be operated when there is no water. Any damage caused due to operating the system without water invalidates the Atlantium warranty.

4.4 Chemical Use for Cleaning in Place (CIP)

- The chemicals selected and the concentrations used must be approved by Atlantium's Application staff, and the facility's quality assurance and safety officials. The CIP process must comply with the written protocols and procedures set in place by those departments. Refer to the section, ***Selecting the Correct Chemicals for CIP*** on page **10-2**
- Use and handle all chemicals in strict accordance with their manufacturer's instructions, product information sheets, and material safety data sheets (MSDS).
- NaOH (Caustic Soda) as it causes irreversible damage to quartz. It is strictly forbidden to use it without a specific analysis of temperatures, concentration, frequency and duration and written approval from Atlantium's application engineer.

Refer the Chemical Safety information at: http://www.inchem.org/documents/icsc/icsc/eics0056.htm

4.5 System Safety Features

The Atlantium Hydro-Optic Water Disinfection system includes the following safety features:

4.5.1 UV Protective Seal

Each lamp is enclosed within a sealed lamp chamber that prevents the UV light from escaping. This means that with proper operation there is no ambient UV escaping from the Unit. If, for any reason, UV light is escaping (if you see visible light leaking from the Unit), the Unit should be serviced immediately.

4.5.2 Lamp On / Off Switch

An On/Off switch is located on the Connection Box on top of the Atlantium Unit.
In the event of an emergency, as well as for maintenance purposes, each lamp can be shut down immediately by turning this switch to the Off position.
To restore operation, rotate the button clockwise and then the system restarts.

4.5.3 Software Safety Controls

When the system is started, the Atlantium software performs a series of internal self-testing routines prior to starting system operation.

If the system **does not** pass these tests satisfactorily, UV lamp operation is disabled until the problem is resolved.

If problems arise during normal operation, appropriate error messages with varying levels of severity are generated on the touch-screen control panel and on the **TRACS** interface.

Screens that provide setup options and compliance reports are password protected.

WARNING!

Technician mode has these levels of safety controls:

- **The Technician mode screens are password protected.**
- **All changes in the Technician screens are logged and tracked in the Settings Report.**

However, do not leave the Controller unattended while in Technician mode even for a short time. An untrained person could damage the operation of the Atlantium system from Technician mode.

4.6 Atlantium Training

As part of the Commissioning and Hand-Off process, Atlantium provides hands-on training on all aspects of the Atlantium system for your designated personnel. Atlantium offers training upgrades as needed and is ready to provide additional training for new personnel or any other needs related to its systems.

5 Installing the Atlantium System

Installation overview:

Hardware setup to be implemented by your facility personnel:

Phase 1 Unpacking and checking the contents of the Atlantium system packaging (See below)
Phase 2 Installing Sampling valves and CIP ports (See page **5-2**)
Phase 3 Positioning the Atlantium Unit and connecting to the Piping Infrastructure (See page **5-6**)
Phase 4 Mounting the **Controller(s)**, Ballast Module(s), etc. (See page **5-8**)
Phase 5 Cabling the **Controller(s)**, Ballast Module(s), etc. (See page **5-19**)

Commissioning to be implemented by Atlantium personnel:

Phase 6 Starting up the system (See page **6-1**)
Phase 7 Configuring the **Controller** (See page **7-1**)
Phase 8 Installing and configuring the **TRAC Software** (Optional) (See page **8-1**)
Phase 9 Tuning the System (See page **10-27**)
Phase 10 Completing the System Setup and Testing (See page **9-1**)
The Installation Process Flow diagram below maps out the installation process.

5.1 Installation Process Flow Diagram

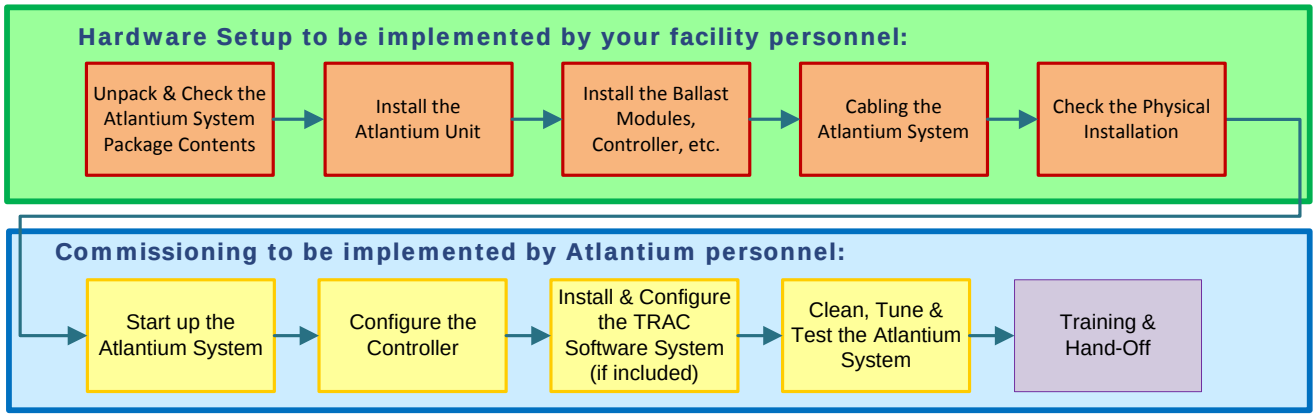

Figure 5-1: Installation Flow Diagram

5.2 Setting the Main Circuit Breakers to OFF Position

Before beginning work to connect the wires/cables of the Atlantium system components, turn the main circuit breakers of the electrical lines feeding

the Atlantium system components to the **OFF** position. **Verify that no electrical feed to the Atlantium system components is live.**

WARNING!!!

UNDER NO CIRCUMSTANCES
SHALL ELECTRICAL WORK BE CARRIED OUT WITHOUT VERIFYING THAT ALL MAIN CIRCUIT BREAKERS OF THE ELECTRICAL LINES FEEDING THE ATLANTIUM SYSTEM COMPONENTS ARE SET TO THE OFF POSITION AND THAT NO ELECTICAL FEED IS LIVE.
DO NOT SET ANY MAIN CIRCUIT BREAKER OF THE ELECTRICAL LINES FEEDING THE ATLANTIUM SYSTEM COMPONENTS TO THE ON POSITION UNTIL ALL ELECTRICAL WIRING IS PROPERLY CONNECTED. UNCONNECTED WIRES/CABLES IN A LIVE ELECTRICAL FEED IS A HAZARDOUS SITUATION THAT CAN RESULT IN DEATH OR SERIOUS INJURY.

5.3 Unpacking And Checking Package Contents

The Atlantium system is packaged and shipped in specially packed crates that contain:

- The Atlantium Unit
- Ballast Module(s)
- Controller
- 48VDC Module
- OVPD Module (if included)
- Documentation
- Peripheral accessories as per your order and listed on your delivery documents are crated according to their size and weight. Small accessories may be crated together.

Each of the crates is connected to a forklift-friendly wooden pallet. The Atlantium crates must be lifted off the transport vehicle using a forklift or crane by a qualified operator.

➲ To unload and check the system:

Step 1. Using the forklift or crane, lift each of the crates off the transport vehicle and lower them to a level ground surface.

Step 2. Walk around and inspect each crate for damage. Note if there is any separation in the joints or any other indication of any damage in transit. If there is any indication of damage, take a photograph of it and use extra caution when proceeding to the next step.

Step 3. Unclamp and remove the panels of the crates.

Step 4. As you remove the wrapping and shipping protections, verify that the contents of the crates are correct according to the delivery documents. The Atlantium Unit contains a plate with the model number and other product information. Verify that the correct product version is supplied.

- Immediately report to Atlantium and to the insurance carrier any damage to the crates or to the Atlantium system found before opening the crates or during every step of unpacking, installing or testing of the system.
- If you ordered more than one Atlantium system, check the serial numbers against the delivery documents to verify which components comprise each individual system.

5.4 Installing Sampling Points and CIP/Draining Ports

Both the Sampling Points and CIP/Draining Ports must be installed on the inlet and outlet sides of the Atlantium Unit.

5.4.1 Installing the Inlet/Outlet Sampling Points

Aseptic sampling valves are to be located indoors in clean environment without away from direct contact with fan or A/C air flow. They each must be a dedicated valve for sampling only and resistant to alcohol and flame. For information on the Sampling valve's components, see ***Sampling Valve Components and Kits*** on page **3-14**. See ***Taking Microbial Samples*** on page **9-3.** for information on using the Sampling valves.

On the inlet and outlet sides of the water line, connect the aseptic sampling valves,

➲ To install an inlet/outlet sampling point:

Step 1. On the Inlet side, install the **Long welding ferrule** or **threaded male adapter (1).**

- Position aseptic sampling valves **(1 & 2** in **Figure 5-6** on page **5-4)** **horizontally** (90^0) on the pipe center, within 50cm of the Unit.
- **For Stainless Steel. Pipes:**
  - Weld the 1 inch **ferrule (1)** clamp fitting at a horizontal orientation (3 or 9 o'clock).
  - Perform a polishing process to achieve a smooth area on the external and internal part of the pipes.
  - Passivate the pipes to avoid corrosion.
- **For Plastic Pipes:**
  - Thread the **male adapter (1)** clamp fitting to the port.
- Repeat for the Outlet side sampling point.

Step 2. Fit the 1" gasket **(2)** into the **welding ferrule** or **threaded male adapter (1)**.

Step 3. Fit the aseptic **sampling valve (4)** on over the gasket **(2).**

Step 4. Fit the clamp **(3)** around the aseptic **sampling valve (4)**/ gasket **(2)**/**welding ferrule** or **threaded male adapter (1)** and close and lock it.

Figure 5-2: Generic welded ferrule (Threaded male adapter is placed in the same position vis a vis the pipe)

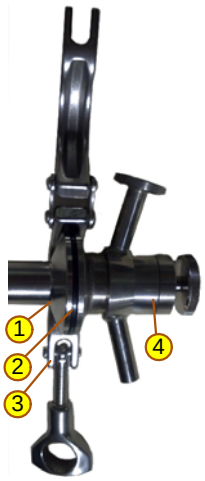

Figure 5-3: The clamp is placed around the aseptic **sampling valve** /gasket /**welding ferrule** or **threaded male adapter**

Closing Off the Aseptic Sampling Valve When Not in Use

Step 5. Into the spout of the sampling valve, fit the 1/2”gasket **(6)** and fit the cap **(7)** over it.

Step 6. Fit the 1/2” clamp **(5)** around the sampling valve spout/ gasket **(6)** /cap **(7)** and close and lock it.

Figure 5-4: The clamp is closed

Figure 5-5: The clamp is closed

5.4.2 Installing the CIP/Draining Ports

The CIP (Cleaning-In-Place) recirculation system is used for the periodic cleaning and sterilization process of the Atlantium unit's inner surfaces and quartz tube. For more information on performing CIP, see ***Cleaning In Place (CIP)*** on page **10-2**.

A CIP KIT includes the CIP Cart with water reservoir and a pump, capable of pumping up to 4 cubic meters per hour. It includes a supply hose: ID 0.75" / 19mm (5 meters / 15 feet long) and a return hose: ID 0.75" / 19mm (5 meters / 15 feet long) and pocket to hold these hoses. See the diagram below.

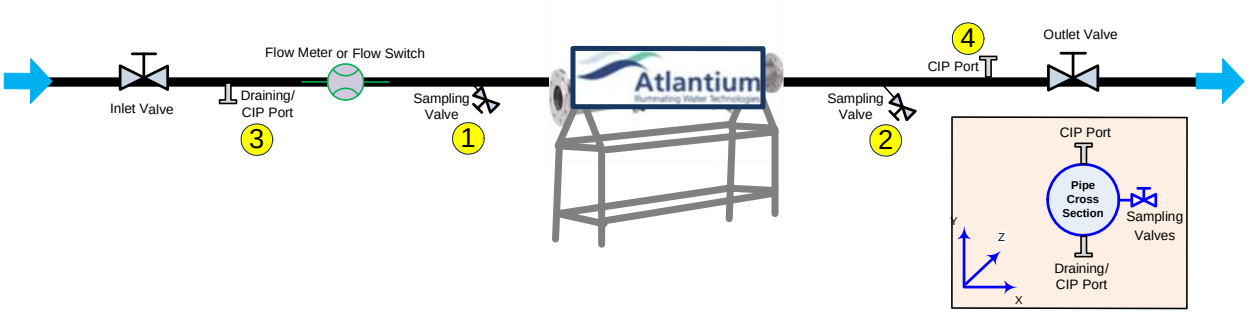

Figure 5-6: CIP Ports and Sampling Valves Orientation

Position the CIP/draining valves **(3 & 4)** on both the inlet and outlet sides of the Atlantium unit. To enable connection of the CIP kit, use high-quality, sanitary equipment, including a 1 inch tri-clamp/ferrule on both sides. A CIP/Draining valve is to be located 1D after the Inlet valve and 1D before the Outlet valve. When not using the CIP [ports. close the valve outlet using the tri-clamp cover.

➲ To install the CIP ports:

Step 1. Weld or thread the 1 inch ferrule at a vertical orientation:

For municipal applications, prepare 1” screw ports for the valves and insert the valves:

- **Draining Valve:** at a 6:00 o'clock orientation on one side of the Atlantium unit.
- **CIP Valve:** at a 12:00 o'clock orientation on other side of the Unit.

Figure 5-7: Generic welded ferrule (Threaded male adapter is placed in the same position vis a vis the pipe)

For all application except municipal:

- **For Stainless Steel. Pipes:**
  Weld the 1 inch clamp fittings:
  - **Draining port:** at a 6:00 o'clock orientation on one side of the Atlantium unit.
  - **CIP port:** at a 12:00 o'clock orientation on other side of the Unit.
  - Perform a polishing process to achieve a smooth area on the external and internal part of the pipes.
  - Passivate the pipes to avoid corrosion.
- **For Plastic Pipes:**
  - Thread the clamp the valve fittings to the port..

Closing Off the CIP/draining Ports When Not in Use

Step 2. Into the ferrule, fit the 1/2”gasket **(6)** and fit the cap **(7)** over it.

Step 3. Fit the 1/2” clamp **(5)** around the CIP port/ gasket **(6)** /cap **(7)** and close and lock it.

Figure 5-9: The clamp is placed around the CIP port /gasket /cap

Figure 5-8: The clamp is closed

Preparing the CIP Hoses

Step 4. On one end of a hose **(A)**, using an appropriate screwdriver, loosen the band **(C)**.

Step 5. Connect the hose to one of the adapters on the cart **(B)**. Push the hose up a far as you can.

Step 6. Using the screwdriver, tighten the band **(C)**.

Step 7. On the other end of a hose **(D)**, using an appropriate screwdriver, loosen the band **(F)**.

Step 8. Connect the hose to one of the hose adapters **(E)**. Push the hose up a far as you can.

Step 9. Using the screwdriver, tighten the band **(F)**.

Step 10. Repeat with the second hose to the adapter on the other side of the cart.

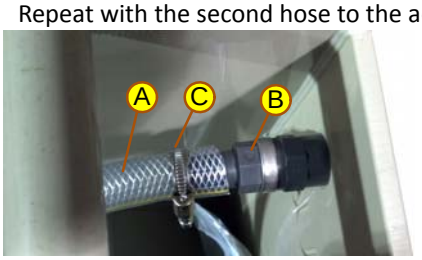

Figure 5-10: Hose Connection to One Side of Cart

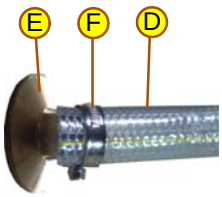

Figure 5-11: Hose Connection to Hose Adapter

5.5 Positioning the Atlantium Unit

Read through this typical installation section ***before*** you begin.

Make sure to use your installation drawing during this procedure. The Unit's triangle support brackets must rest on a strong, stable, level surface and anchor the Unit.Trace the path to be taken to position the Unit to its planned location and clear it of all obstacles.

Atlantium systems can be installed horizontally or vertically in your piping system. For a vertical installation, the Atlantium Unit can be positioned against a wall or on skids.

5.5.1 Required Equipment

Supply the following tools and equipment:

- Lift or crane
- Lifting strap
- Bolts, washers & lock washers
- Supports for inlet/outlet piping and for the Unit as shown on your installation plan

The Atlantium unit is heavy - refer to Table 2-3, ***Ballast Module Physical Details***, in **Section 2**, page 5. Two people are required to get the Atlantium Unit to the designated installation location - a qualified lift or crane operator, at least one other person to guide the Unit as it is transported, and others as needed.

➲ To position the Atlantium unit:

Step 1. Note the direction of the water flow that is to occur in the piping process into which you intend to place the Atlantium Unit and the Flow indicator marked on the unit. Use this information to decide at which angle to lift the Unit for transport. This is to help you to prepare for placing the Unit at the location.

Step 2. To lift the Unit from its packing crate, loop a lifting strap through the lifting support rings **(1)** at the end fittings on each side of the Unit.

Step 3. Join the straps together with a third central strap that is being connected to the lift or crane.

Figure 5-12: Lifting Strap Locations

Step 4. Ensure that all straps are connected securely to the Unit, to each other and to the lift/crane.

Step 5. Using the lift/crane, lift the Unit by the straps, out of the crate and position it for safe transport (near-ground level is preferred).

Step 6. Using the lift/crane and the designated person to guide, carry the Unit to its intended location.

Step 7. Install the Atlantium Unit:

Horizontal Installation

a At the designated location, check the installation plan, including the distances between the triangle support brackets.

b Position the customer-provided supports /surface so that the Unit's triangle support brackets are at least 750mm / 29.5 inch above the floor. (Refer to ***RZ163 Systems' Interface Control Drawings*** provided by Atlantium.)

c Carefully lower the Unit to its position.

d Using the appropriate bolts, washers and lock washers, bolt the triangle support brackets to the customer-provided corresponding supports.

Vertical Installation

a Position the Atlantium Unit vertically so that the Flow label is point in up To verify if the position is correct, check that the **RZ300** Unit is positioned so that the view port is on the **top** end

b Position the Unit's triangle support brackets against the wall or skids.

c Carefully lower the Unit and using the appropriate bolts, washers and lock washers, bolt the triangle support brackets to the customer-provided corresponding supports.

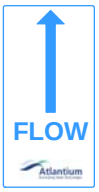

Figure 5-13: Flow Label Points Up

Step 8. To connect the fitting on one side of the Unit to the fittings of the facility's pipes, insert an o-ring between the Unit's and the facility's pipes. In some cases, a reducer or expander may be necessary.

Step 9. On one side of the Unit to the flanged fittings of the facility's pipes with eight appropriate **(8)** sets of bolts/nuts/flat and lock washers - do not tighten the hardware.

Step 10. Repeat the step above for the other side of the Unit.

Step 11. Tighten the fastening hardware so that the torque pressure around the fittings is even, and the Unit is firmly connected to the facility's water line.

Step 12. For installations with multiple units, repeat this procedure for the second unit.

Step 13. To check for any leakage, open the Inlet and Outlet valves to allow water to flow through the newly installed Unit and its surrounding process piping.

Step 14. If you find any leakage, tighten the connections.

Step 15. Close the Inlet and Outlet valves and use the Draining valve, drain the Atlantium system piping from Inlet valve to Outlet valve.

Figure 5-14: Generic Tri-Clamp Fitting

5.6 Installing Surge Protection

Verify that you have a protective device that prevents electrical surges and fluctuations from causing damage. You must have at least on of these three types of surge protection:

- UPS (Uninterruptable Power Supply) has an internal battery that allows the equipment plugged into it to continue to run in the event of a power outage until power is restored. It also has the benefit of performing the same functionality of surge protectors, protecting against spikes and surges. If needed, the UPS allows the system to be shut down cleanly if power is out for a lengthy period.
- Surge protection device protects your equipment from variations in electrical current, such as surges and spikes.
- OVPD module (Over Voltage Protection Device) - if you have purchased this from Atlantium, see below for directions on mounting and connection it.

5.6.1 Installing a Surge Protection Device

The diagram to the right shows the generic wiring for a surge protection device. See the manufacturer's installation instructions with the surge protection device to be installed. For more information about surge protection devices available via Atlantium, see ***Surge Protector Devices*** on page **2-7**.

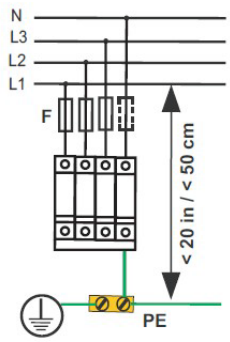

Figure 5-15: Surge protection device wiring - generic

5.6.2 Mounting and Connecting the OVPD Module

If your system includes the OVPD Module, mount it in an appropriate location in your electric box and connect it according to the directions in this section.

➲ To connect the OVPD

Step 1. To connect the mains to the OVPD module, thread the mains cables (customer provided) through the openings at the bottom of the OVPD module **(B)** and connect them to the terminal block for the mains **(C)** according to the diagram below.

Step 2. To connect the cables coming from the circuit breaker before the Atlantium Unit, thread the cables through the opening at the top of the OVPD module **(A)** and connect them to the terminal block for these cables **(D)** according to the diagram below.

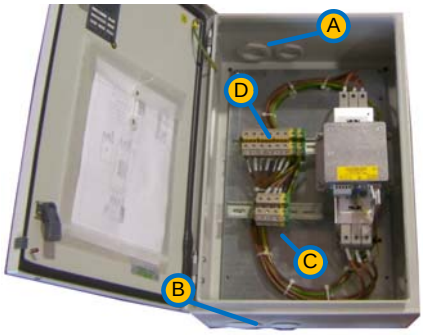

Figure 5-16: OVPD Connections

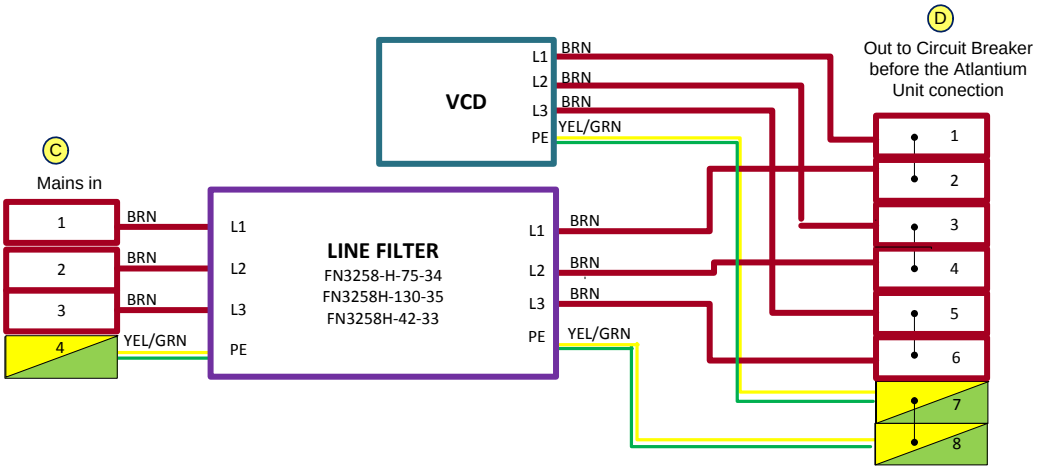

Figure 5-17: Typical Atlantium System Connections for the OVPD

- All wires are 5AWG with UL Standard
- Test: 100% Insolation Resistance: 1000VDC/0.1sec

5.7 The Controller

Table 5-1: Controller Components

#	Item
1	Mounting Holes
2	Data Cable + Gland
3	Electrical Cable + Gland
4	Electrical Connectors
5	Glands for Peripheral Component Connections
6	Peripheral Component Connections
7	Data Cable and Modbus Connectors

Figure 5-19: Controller

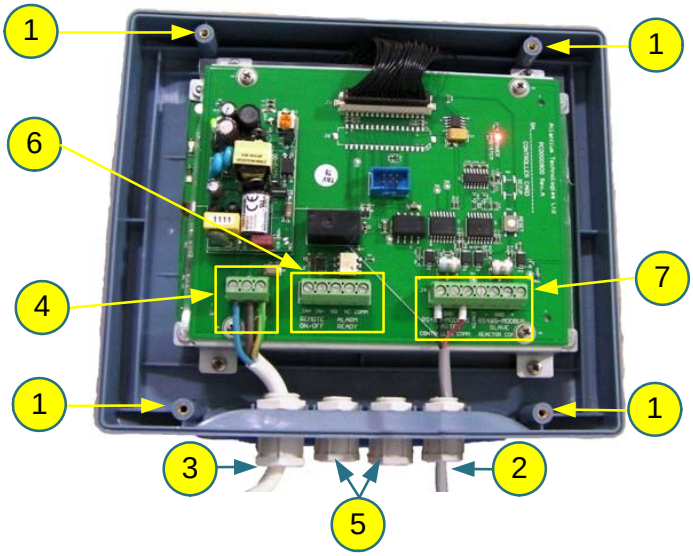

Figure 5-18: Controller Interior

5.7.1 Mounting the Controller

The **Controller** can be mounted on a wall or suitable anchoring point. The **Controller** comes with an electrical and Data cable, each 5m long. However it can be placed up to 50 meters (164.04 ft.) from the Atlantium Unit, in a place that it is easy to reach the touch screen and read the monitoring information. A longer Data Cable can be ordered for this purpose.

- When mounting the **Controller**, take into consideration the length of the cables.
- **Do not Stretch Electrical Cables - Avoid tension on the electrical cables. They are to be installed within conduits and must not be stretched.**

➲ mount the Controller on the wall:

Step 1. Using the **Controller**'s mounting bracket, on the wall space designated for the **Controller**, make four marks according to the its holes **(1)**.

Step 2. The mounting holes are 8.5mm (0.33") in diameter. Using the appropriate drill bit, drill the four holes.

Step 3. In each hole, insert a plastic anchor.

Step 4. Position the **Controller**'s mounting bracket so that its four holes **(1)** fit over the drilled holes.

Step 5. Using appropriate screws and with a screwdriver, screw in the four screws in a diagonal pattern (one corner, then the opposite corner).

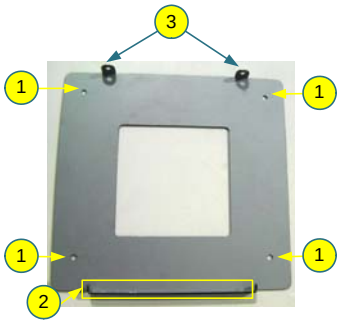

Figure 5-20: Controller's Mounting Bracket

Step 6. To secure the Unit firmly, return to each screw in the diagonal patter and tighten the screws securely.

Step 7. Before proceeding to mount the Controller:

- To connect the Modbus cable and cables for any peripheral equipment to be part of the system and/or to replace the Data cable with a longer one, see ***Controller Connections*** on page **5-10**
- If you plan to use a longer power cable, see ***Mounting the 48VDC Module*** on page **5-14**.

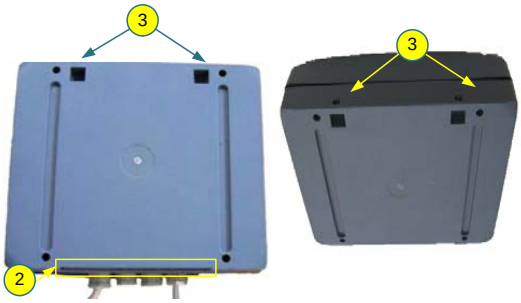

Figure 5-21: Controller's Mounting Interface

Step 8. To mount the **Controller**, place it onto its mounting bracket so that its grove at the bottom **(2)** rests on the lip at the bottom of its mounting bracket **(2).**

Step 9. Press the **Controller** back onto the mounting bracket such that the top of the Controller fits under the mounting bracket's tabs **(3)** at the top. The screw holes **(3)** on the top of the Controller should line up with the mounting brackets tabs **(3).**

Step 10. Using the provided screws, and with a screwdriver, fasten the screws at the top **(3)** so that the **Controller** is firmly attached to its mounting bracket.

➲ To mount the Controller on skids:

Step 1. Set up the skids with spacing that matches the spacing measurements for the holes in the **Controller**'s mounting bracket **(1)**. Refer to **Figure 5-20** above.

Step 2. Position the **Controller**'s mounting bracket so that its four holes **(1)** fit over corresponding holes on the skids.

Step 3. Using appropriate screws and with a screwdriver, screw in the four screws in a diagonal pattern (one corner, then the opposite corner).

Step 4. To secure the Unit firmly, return to each screw in the diagonal patter and tighten the screws securely.

Step 5. Before proceeding to mount the Controller:

- To connect the Modbus cable and cables for any peripheral equipment to be part of the system and/or to replace the Data cable with a longer one, see ***Controller Connections*** on page **5-10**
- If you plan to use a longer power cable, see ***Controller Connections*** on page **5-10**.

Step 6. To mount the **Controller**, place it onto its mounting bracket so that its grove at the bottom **(2)** rests on the lip at the bottom of its mounting bracket **(2).**

Step 7. Press the **Controller** back onto the mounting bracket such that the top of the **Controller** fits under the mounting bracket's tabs **(3)** at the top. The screw holes **(3)** on the top of the **Controller** should line up with the mounting brackets tabs **(3).**

5.7.2 Controller Connections

The Controller includes the following connections:

- Power Cable
- External On/Off Signal
- General Alarm Signal
- Data Cable
- Modbus

Avoid direct contact with the electronic circuit board which is sensitive to electrostatic discharge (ESD). Utilize best practices regarding ESD when replacing the power cable.

To connect peripheral equipment:

Opening the Controller's Back

Step 1. Using the appropriate screwdriver, unfasten the screws on the **Controller (A)** and carefully remove the back.

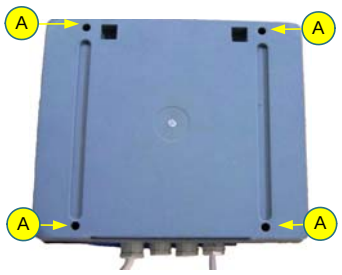

Figure 5-22: Controller's Back

Connecting the Signals

Step 2. To connect an **External On/Off** signal, thread the signal cable through one of the holes with plastic glands on the bottom **(5)** and connect the wires to the appropriate connectors as show to the right **(6)** and as shown in **Figure 5-24** as terminals **4** and **5** (corresponding to **6** in **Figure 5-22**).

Step 3. To connect a.n **General Alarm** signal, thread the signal cable through one of the holes with plastic glands on the bottom **(5)** and connect the wires to the appropriate connectors as show to the right **(6)** and as shown in **Figure 5-24** us terminals **6**, **7** and **8** (corresponding to **6** in **Figure 5-22**).

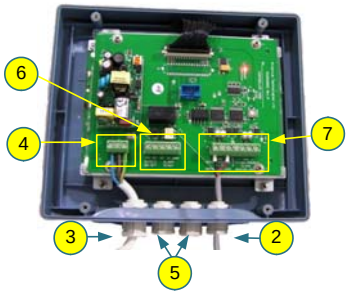

Figure 5-23: Controller's Circuit Board

Connecting the Modbus

Step 4. To connect to an external facility control via Modbus, thread the signal cable through one of the holes with plastic glands on the bottom **(5)** and connect the wires to the appropriate connectors as show to the right **(7)** and as shown in **Figure 5-24** as terminals **12**, **13**, **14** and **15** (corresponding to **6** in **Figure 5-24**). For more information, see **Appendix A**, ***Modbus Communication Protocol*** . Add jumpers to any unused pins as shown in the diagram below.

Adding a Longer Data Cable

Step 5. To replace the Data cable with a longer one:

- **a** Unfasten the Data cable from the connectors as show to the above **(7)** as terminals **9**, **10** and **11** (**- GND +**) (corresponding to **6** in **Figure 5-22**).
- **b** Loosen the plastic nut of gland **(2)** and pull it through and out of the plastic gland at the bottom.
- **c** Thread the longer Data cable through its plastic gland **(2)** and fasten it to the appropriate connectors mentioned above.

PIN Assignments

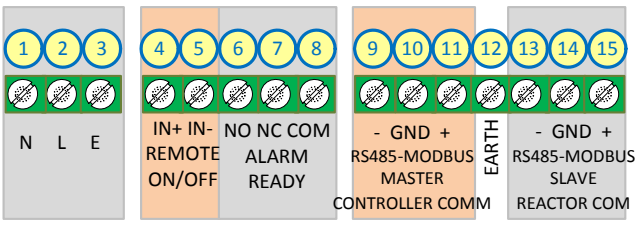

Figure 5-24: Controller Terminal Connectors

Schematic Diagrams

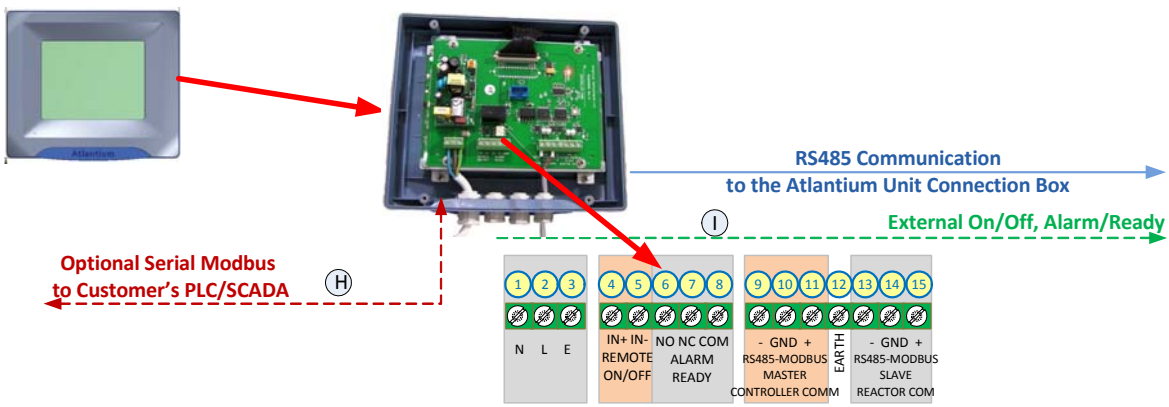

Figure 5-25: Controller Terminal Connectors Schematic Drawing

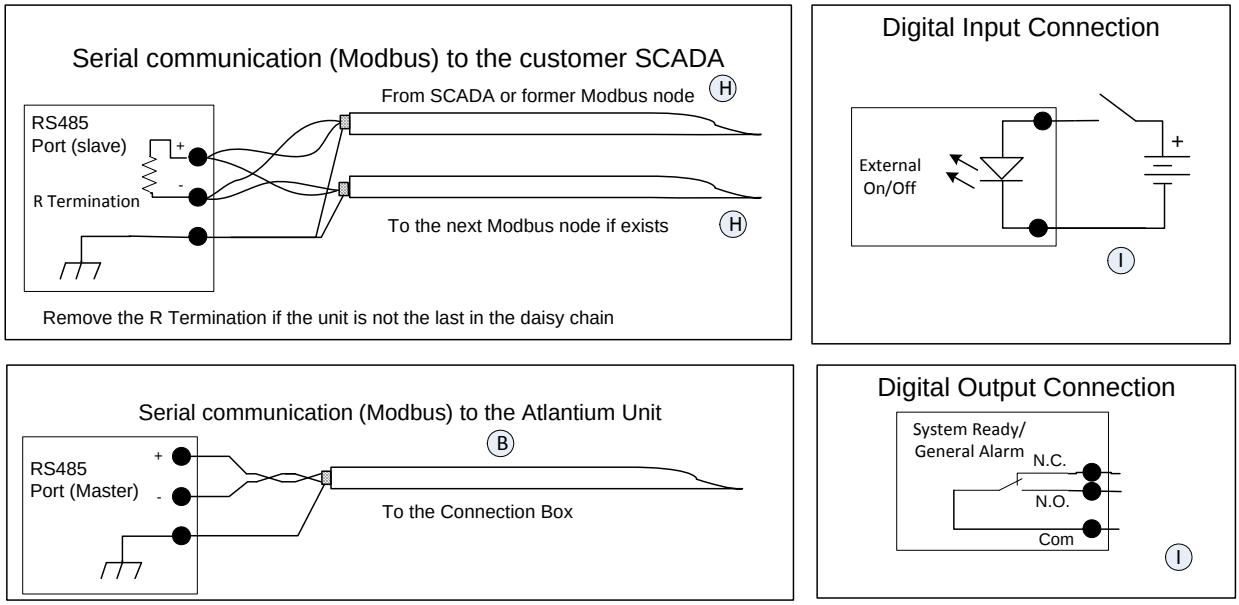

Figure 5-26: Controller Terminal Connectors Wiring Drawings

Table 5-2: Peripheral Equipment Cable Details

#	Item	Sizes	Cat. No.	Description	Diameter	Supplied by
B.	Controller Module RS485 data communication cable	5m/16.4ft. 10m/32.8ft.	HSL013200 HLS014500	Shielded twisted pair, 22AWG, 300V(General cables C0720A)	0.25 inch	Atlantium
G.	Flow Meter 4-20mA or Flow Switch cable Dry contact (See ***Cabling Components*** on page **5-20.**)	Customer defined	-	Connect to Connection Box no.1 through gland size 7. Wires size according to Flow Meter / Flow Switch manufacturer's instructions	0.25 inch	Customer
H.	RS485 Data communication cable	Customer defined	-	Shielded twisted pair, 22AWG, 300V	0.25 inch	Customer
I.	Digital output, Digital inputs, Analog outputs	Customer defined	-	Shielded cable, pairs of 22AWG, 300V	According to the number of pairs	Customer
R.	Laptop Controller interconnect	Customer defined	-	Standard ETHERNET cable	-	Customer

Table 5-3: Controller Connector Pins

#	Item	
1, 2, 3	Power cable connection.	
4	External On/Off IN+	On: 20-28VDC Off: <1VDC See ***External On/Off - Additional Notes*** below.
5	External On/Off IN-	
6	General Alarm/System Ready Dry Contact Normally Open **NO**	
7	General Alarm/System Ready Dry Contact Normally Closed **NC**	
8	General Alarm/System Ready Dry Contact Common **COM**	
	Data Cable Connectors	
9	RS485 / Modbus Master TX-	Cable is provided already attached. For information on attaching the cable to the Connection Box of Lamp 1. .
10	RS485 / Modbus Master Ground	
11	RS485 / Modbus Master TX+	
12	Earthing connector	
13	RS485 / Modbus Slave TX- to connect to an external control system	The **Controller** is provided including a **100R, <5% , 0.25W, Through hole resistor** between **#13** and **#15**. This resistor is to be removed in **Controllers** connected by daisy-chain, but is to be left attached in the last **Controller** of the daisy-chain.
14	RS485 / Modbus Slave Ground	
15	RS485 / Modbus Slave TX+	

5.7.2.1 External On/Off - Additional Notes

For regular wiring:

- Positive voltage must be connected to pin 4 – IN+
- Negative (GND) must be connected to pin 5 – IN-

Table 5-4: External On/Off

Controller Screen More Settings	Physical Connection	Physical Connection	
	IN+	IN-	Lamp Control
NC Unchecked	0 VDC	0 VDC	Off
NC Unchecked	+24 VDC	0 VDC	On
NC Checked	0 VDC	0 VDC	On
NC Checked	+24 VDC	0 VDC	Off

5.7.3 Closing the Controller's Back

➲ **To close the Controller's back:**

Step 1. Tighten all of the glands' plastic nuts.

Step 2. Return the **Controller**'s back cover to the back of the **Controller**. Make sure that the waterproof seal is positioned correctly between the back and front parts of the **Controller.**

Step 3. Using the appropriate screwdriver, refasten the screws in the Controller **(A** in **Figure 5-22)**.

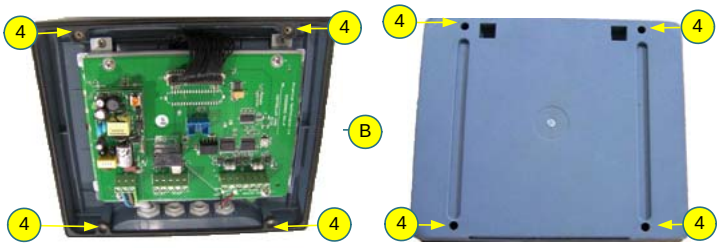

Figure 5-27: Controller's Circuit Board

5.8 Mounting the 48VDC Module

The 48VDC Module can be mounted on a wall or suitable anchoring point up to 10 meters (32.8 ft.) from the Atlantium unit. The 48VDC Module can be positioned near a Ballast Module with a minimum of 300 mm (11.8 inches) of clearance on each side for proper ventilation.

The 48VDC cable, Data cable, and Power cable are supplied attached to the 48VDC Module.

- **When mounting the 48VDC Mod**ule take into consideration the length of the cables.
- **Do not Stretch Electrical Cables - Avoid tension on the electrical cables. They are to be installed within conduits and must not be stretched.**

To mount the 48VDC Module on the wall:

Step 1. On the wall space designated for the 48VDC Module, make four marks according to the spacing measurements for mounting orientation on the ICD drawing (see the ICD provided by Atlantium).

Step 2. The mounting holes **(A)** are 8.5mm (0.33") in diameter. Using the appropriate drill bit, drill the four holes.

Step 3. In each hole, insert a plastic anchor.

Step 4. Uncrate the 48VDC Module package and carefully lift it out.

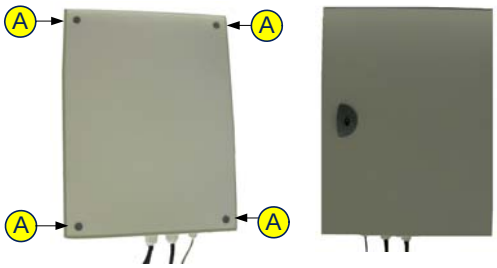

Figure 5-28: 48VDC Module - Back and Front View

Step 5. Open the door of the 48VDC Module and locate the mounting holes **(A)**.

Step 6. Remove the protective covers from each hole.

Step 7. Position the 48VDC Module so that its four holes fit over the drilled holes.

Step 8. Using appropriate screws and with a screwdriver, screw in the four screws in a diagonal pattern (one corner, then the opposite corner).

Step 9. To secure the Unit firmly, return to each screw in the diagonal pattern and tighten the screws securely.

Step 10. Verify that the circuit breakers are on the **Off** position.

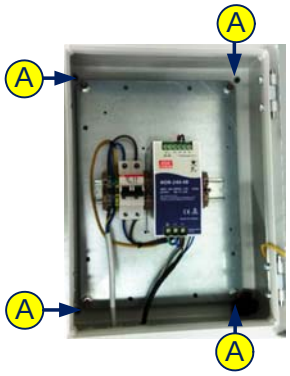

Figure 5-29: 48VDC Module - Generic Inside View

To mount the 48VDC Module on skids:

Step 1. At the location designated for the 48VDC Module, set up the skids with spacing that matches the spacing measurements for mounting orientation on the appropriate ICD drawing (see the ICD provided by Atlantium).

Step 2. The mounting holes **(A)** are 8.5mm (0.33") in diameter. Using the appropriate bolts and nuts, with a screwdriver, screw in the four bolts and add the nuts leaving around 5.6mm (0.20-0.24') sticking out.

Step 3. Uncrate the 48VDC Module package and carefully lift it out.

Step 4. Open the door of the 48VDC Module and locate the mounting holes **(A)**.

Step 5. Remove the protective covers from each hole.

Step 6. Position the 48VDC Module so that its four holes fit over the corresponding holes on the skids.

Step 7. Using appropriate bolts and nuts and with a screwdriver, screw in the four bolts adding the nuts in a diagonal pattern (one corner, then the opposite corner).

Step 8. To secure the Unit firmly, return to each bolt in the diagonal patter and tighten them securely.

5.9 Installing the Ballast Module(s)

Each lamp chamber has a corresponding Ballast Module. The location for mounting the Ballast Module(s) must take into account the length of the cables to be attached from the Atlantium Unit. If you need to calculate space cooling for the location in which you are installing the Ballast Module(s), refer to the heat load per Ballast Module shown below.

Heat Load per Ballast Module: (For calculating space cooling requirements)	210W

- **Do not Stretch Electrical Cables - Avoid tension on the electrical cables. They are to be installed within conduits and must not be stretched.**

Ballast Modules must be installed vertically and positioned at least one meter above ground level. Ballast Modules must be at least 300mm (12") from each other or from any other object around them to allow proper ventilation. Ballast Modules must not be installed within closed cabinets.

You can mount them next to each other horizontally or one above another vertically. Arrange the Ballast Modules in consecutive order from left to right according to the number marked on the bottom of the Ballast Module.

Consult the ICD for the Ballast Modules accompanying this manual.

.

BALLAST MODULE B

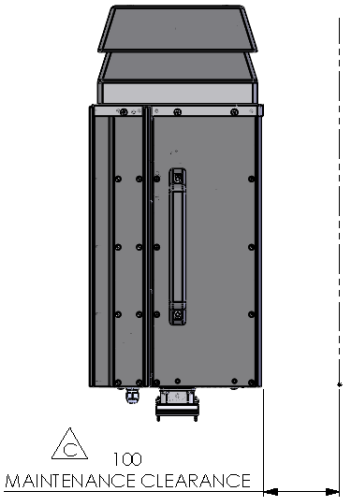

Figure 5-30: Ballast Module B Depth

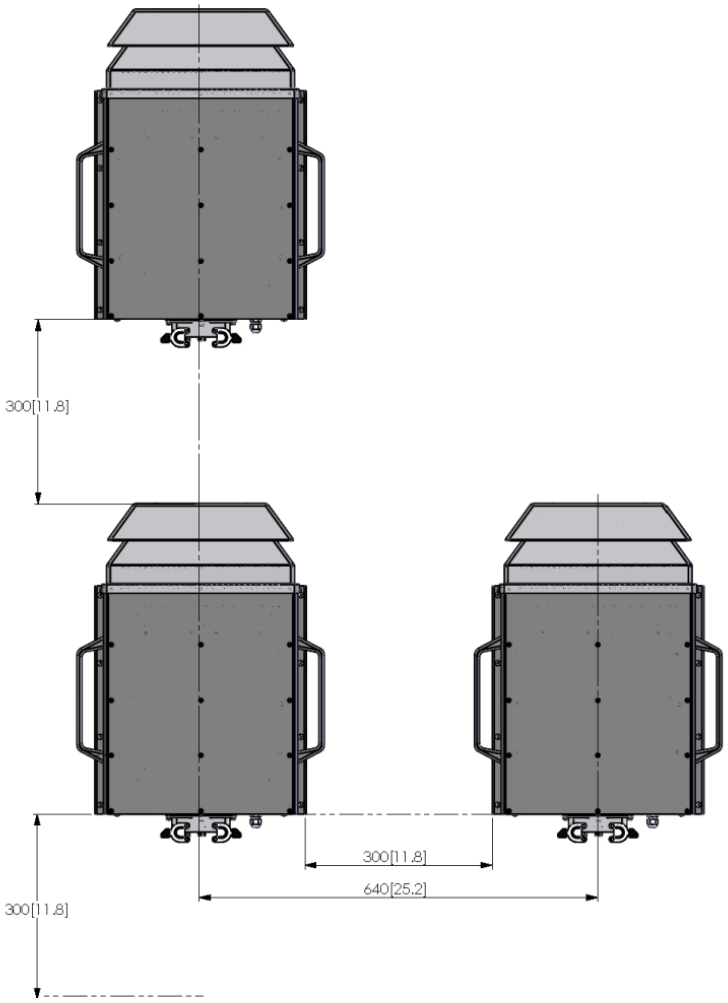

Figure 5-31: Multiple Ballast Module B Installation Diagram

BALLAST MODULE C

Figure 5-32: Ballast Module C Depth

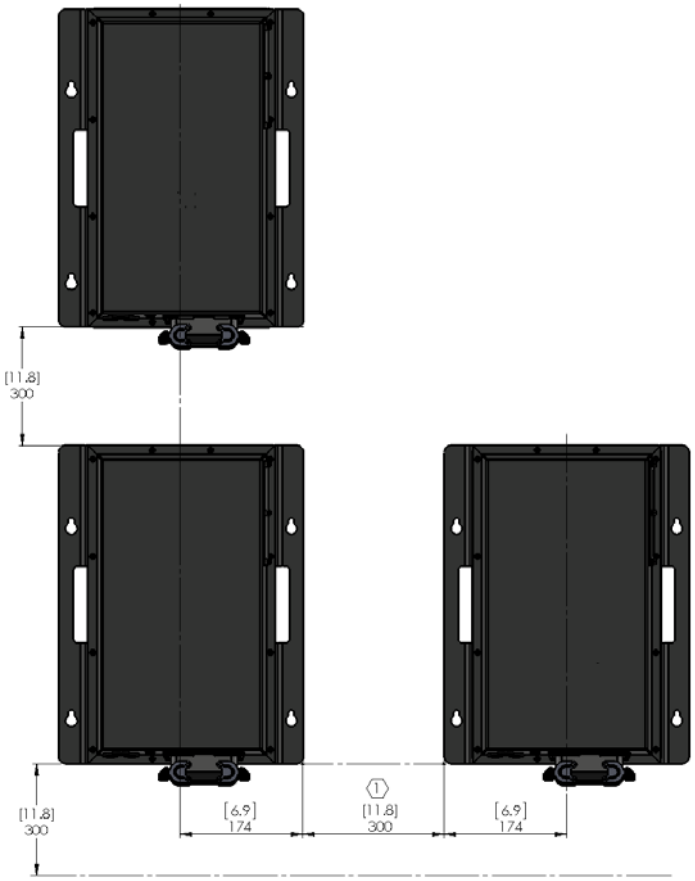

Figure 5-33: Multiple Ballast Module C Installation Diagram

➲ To mount a Ballast Module on the wall:

The Ballast Module is heavy! Be sure that the wall on which you intend to mount the Ballast Module is strong enough to carry its weight.

Step 1. On the wall space designated for the Ballast Modules, make four marks according to the spacing measurements for mounting orientation on the ICD drawing accompanying the documentation.

Step 2. The keyhole slots for mounting are 7mm (0.28”) in diameter for screws size M6 OR 1/4” bolts. Using the appropriate drill bit, drill the four holes.

Step 3. In each hole, insert a plastic anchor and with the appropriate screwdriver, screw in the screw leaving around 5.6mm (0.20-0.24’) sticking out of the wall.

Step 4. Uncrate the Ballast Module package and carefully lift out the Unit.

Step 5. Fit the keyhole slots onto the protruding screw heads and slide the Unit downward until the top of the keyhole slots rest on the screws.

Step 6. To secure the Unit firmly, tighten the four screws.

➲ To mount a Ballast Module on skids:

Step 1. At the location designated for the Ballast Modules, set up the skids with spacing that matches the spacing measurements for mounting orientation on the ICD drawing accompanying the documentation.

Step 2. The keyhole slot for mounting is 7mm (0.28”) in diameter for screws size M6 OR 1/4” bolts.

Step 3. Using the appropriate screwdriver, screw in the four bolts and add the nuts leaving around 5.6mm (0.20-0.24’) sticking out.

Step 4. Uncrate the Ballast Module package and carefully lift out the Unit.

Step 5. Fit the keyhole slots onto the protruding bolt heads and slide the Unit downward until the top of the keyhole slots rest on the bolts.

Step 6. To secure the Unit firmly, tighten the four bolts and their nuts.

5.10 Connecting the Ballast Module Cables

One side of the **Cable Harness** is attached to the connection box of each lamp of the Atlantium Unit. For the connection of the other end of the **Cable Harness**.

Table 5-5: Ballast Module Details

#	Item
A	Single Connector with lock latch
B	48VDC for Fan - 440/480VAC only
C	Pressure Relief
D	Fuse Housing (for Atlantium Technicians only)
E	Connector width 13.11cm / 5.159inch.

Figure 5-36: Connector Detail

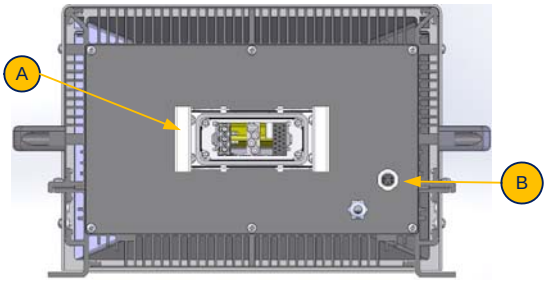

Figure 5-34: Ballast Module A-Waterproof Box

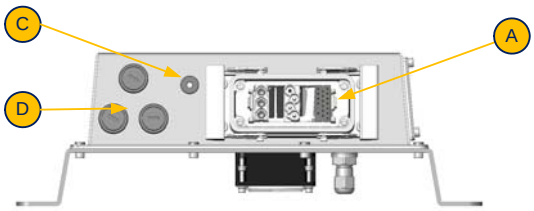

Figure 5-35: Ballast Module A-Waterproof Box

➲ To connect the cable:

Step 1. According to the electrical drawing of the Installation plan, bring the **Cable Harness** attached to the Connection Box of Atlantium Unit up to the Ballast Module.

Step 2. On the Ballast Module, pull the lock latch of the connector to the open position and remove the protective cover.

Be sure to save the protective cover of the Ballast Module connector in an accessible location for the future in case you need to dismantle the Ballast Module for any reason.

Step 3. Connect the lamp cable lead to the Lamp connection port **(A** in the figures above**)** (the connector is keyed so it only matches in one position) and pull the lock latch closed to secure the connection.

5.11 Cabling Components

According to your system configuration, connect the cables of the mandatory flow signal, and optional Inlet, Outlet/Ready and Bypass Valves, etc. to the Connection Box of lamp 1 on the Atlantium Unit. On a side of the Connection box, there are 5 holes marked **9** in the diagram below to be used to thread these cables.

DO NOT DRILL INTO THE CONNECTION BOXES OR ALTER THEM IN ANY WAY!!!!
The Connection Box already contains entry glands for ALL of the cabling needs.
Making holes in a Connection Box will destroy its waterproof seal, endangering the components inside. Do Not draw electricity from the Atlantium Unit's Connection Box as it will damage the Unit's electrical configuration.

Any person involved in handling the Connection Box card or its components is required to wear an electrostatic discharge (ESD) Wrist Strap.
Connect the ESD Wrist Strap to any bolt on the body of the Atlantium Unit or to the metal bracket under the Connection Box using a banana plug or an alligator clip.

The directions below are for all **RZ300 Series** systems, in which the first Connection Box is labeled number **1**. Where there is reference to the first Connection Box, for systems that contain only one Connection Box the single Connection Box is the first Connection Box.

5.11.1 Cabling Signal Components

According to your system configuration, connect the cables of the mandatory flow signal, and optional Inlet, Outlet/Ready and Bypass Valves, etc. to the Connection Box of lamp 1 on the Atlantium Unit. On a side of the Connection box, there are 5 holes marked **9** in the diagram below to be used to thread these cables.

5.12 Connecting the 48VDC Module

The 48VDC cable from the first Connection Box of the Atlantium Unit must be connected to the 48VDC Module.

➲ To connect the 48VDC cable:

Step 1. Thread the 48VDC cable from the first Connection Box of the Atlantium Unit through the gland of the 48VDC Module **(A)**.

Step 2. Connect the wires to the connectors:

- Black wire to the black terminal connector **(B)**
- Red wire to the red connector **(C)**

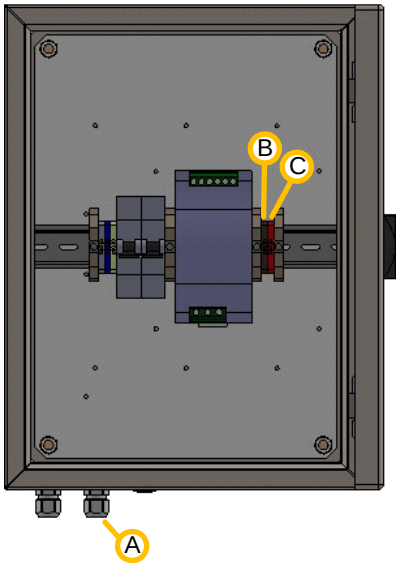

Figure 5-37: Connecting the 48VDC Cable

5.12.1 Connection Box Card 1300-1500

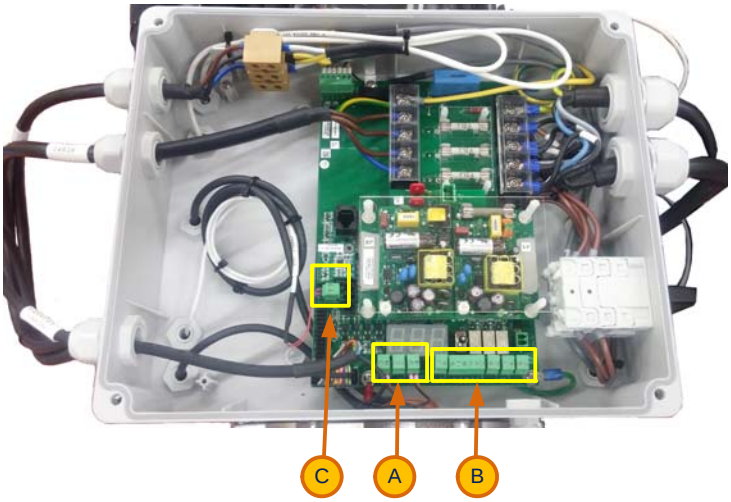

Figure 5-38: Connection Box Card 1300-1500

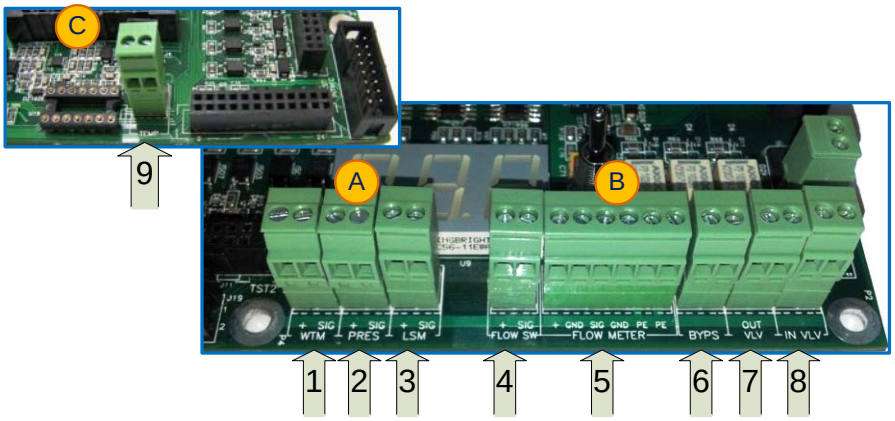

Figure 5-39: Signal Connections on Connection Box Card 1300-1500

Table 5-6: Connections Key - Connection Box Card 1300-1500

#	Text on the Circuit Board	Description	Signal type	Value	Notes
A					
1	WTM	UVT Analyzer input	Analog	4-20mA	already assembled
2	PRES	Pressure Transmitter input (Optional)	Analog	4-20mA	Optional
3	LSM	UVIS Sensor input	Analog	4-20mA	already assembled
B					
4	FLOW SW	Flow switch input	Digital	Dry contact / Open collector	Either Flow Switch or Flow Meter Optional *
5	FLOW METER	Flow meter input	Analog	4-20mA	
6	BYPS STR	Bypass valve output	Dry contact		Optional *
7	OUT VLV	Output valve output	Dry contact		Optional *
8	IN VLV	Inlet valve output	Dry contact		Optional *
C					
9	TEMP	Temperature sensor input	Analog		already assembled

5.12.2 Schematic Diagrams

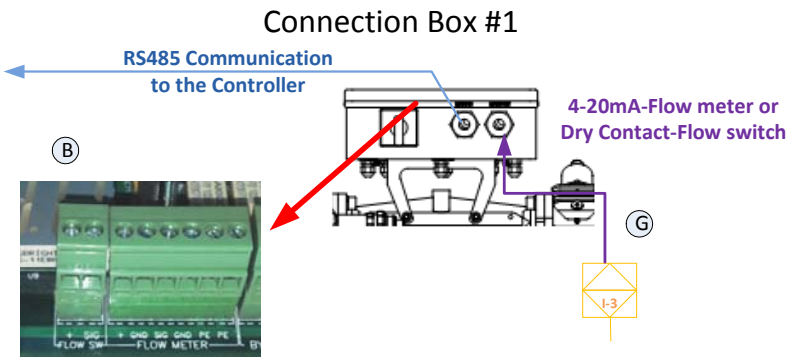

Figure 5-40: Signal Connections on Connection Box Card - Schematic Drawing

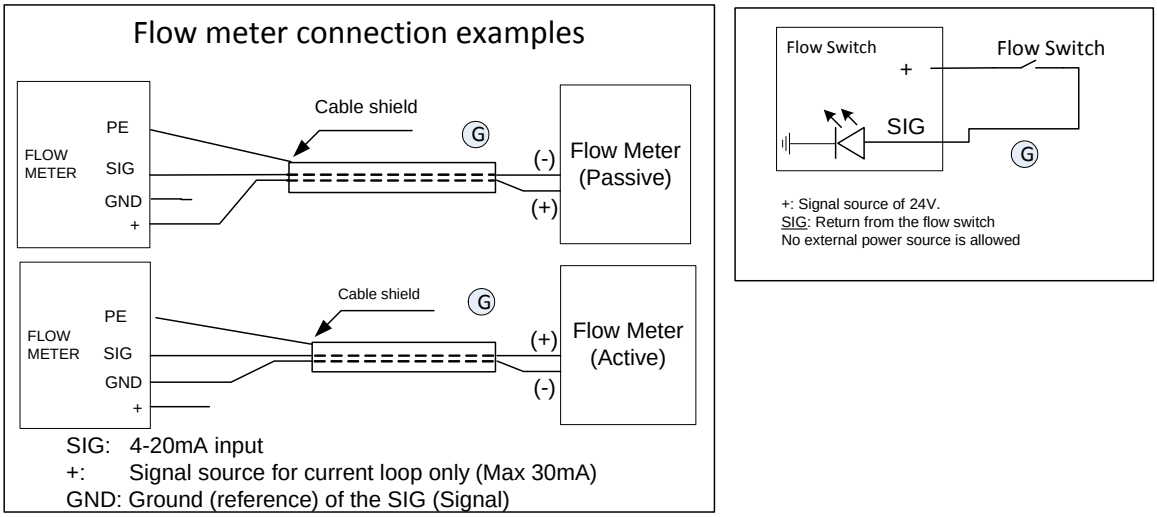

Figure 5-41: Signal Connections on Connection Box Card - Schematic Drawing

For details regarding the cables marked **G**, refer to **Table** 5-2, ***Peripheral Equipment Cable Details***, on page **13**.

➲ To cable signal components:

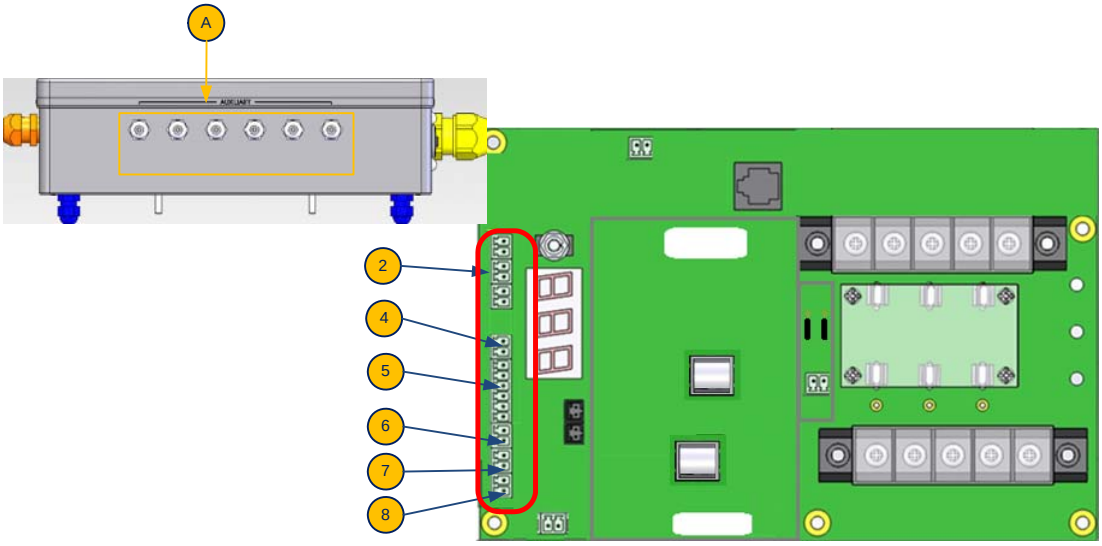

Figure 5-42: Connection Box with Card 1300-1500

Step 1. On the first **Connection Box**, remove the covers of holes (marked **A** in the diagram below) as needed for the auxiliary components in your system configuration.

Step 2. Add plastic glands to each hole to be used.

Step 3. For the (optional) **Inlet Valve** connection, the maximum voltage is **250 VAC**. The maximum current is **1.2 Amp**. The maximum switching capacity is **50 W**. On the first Connection Box, insert the **Inlet Valve** cable into one of the holes marked **A** and thread it up to the Dry Contact connectors labeled **IN VLV** (marked **8** in the diagram above.)

Step 4. For the (optional) **Outlet Valve** connection, the maximum voltage is **250 VAC**. The maximum current is **1.2 Amp**. The maximum switching capacity is **50 W**. On the first Connection Box, insert the **Outlet Valve** cable into one of the holes marked **A** and thread it up to the Dry Contact connectors labeled **OUT VLV** (marked **7** in the diagram above.)

Step 5. For the (optional) **Bypass Valve** connection, the maximum voltage is **250 VAC**. The maximum current is **1.2 Amp**. The maximum switching capacity is **50 W**. On the first Connection Box, insert the **Bypass Valve** cable into one of the holes marked **A** and thread it up to the Dry Contact connectors labeled **BYPS STR** (marked **6** in the diagram above.)

Step 6. To connect the **Flow Signal:**

- For a **Flow Meter**, on the first Connection Box, insert the cable into one of the holes marked **9** and thread it up to the connectors labeled **FLOW METER** (marked **5** in the diagram above.) the standard current is 4-20mA. Connect the wires according to the manufacturer's instructions. The connectors are marked **PE**, **PE**, **SIG**, **GND**, and **+**. Typically, the cable is comprised of three wires and the shield. A wire connects to the **+** port and a second wire connects to the **SIG** port. The GND wire connects to the **GND** port. The Shield connects to one of the **PE** ports.

Use the **+** pin for the signal source (current loop) **ONLY**.
Do not use the **+** pin as the power source for the flow meter. For more information see ***Flow Measurement/ Detection*** on page **3-13**.

- For a **Flow Switch**, on the first Connection Box, insert the cable into one of the holes marked **9** and thread it up to the connector labeled **FLOW SW** (marked **4** in the diagram above.) Connect the wires according to the manufacturer's instructions. The ports are marked **+** and **SIG**.

Step 7. Fasten the plastic nut of each of the cable glands.

5.13 Modbus Communication Connections

Modbus is an application layer messaging protocol for client/server communication between devices connected on different types of buses or networks. Modbus is often used to connect a supervisory computer with a remote terminal unit (RTU) in supervisory control and data acquisition systems.

The Atlantium system can be controlled directly from your facility control system via Modbus - RTU on RS485 (network) serial connection.

To accomplish this:

- The Modbus Settings must be configured in the **Controller**. See ***Configuring the Modbus*** on page **7-6.**
- The Facility control system communication properties must be configured to match that of the Atlantium system. See ***Setting Up the Facility System Communication Properties*** on page **5-27.**
- For the terminal block connectors for the Modbus in the **Controller,** see Table **5-3** ***Controller Connector Pins*** above.
- Signalling communication incoming to the facility control system is according to the Modbus Registers. **Appendix B**, ***System Messages*** .

To ensure communications are operational, be sure to connect the cables **TX to RX** and **RZ to TX**.

5.13.1 Modbus Cable Connections for Multiple Controllers

Using an ADAM- 4561 USB to RS485 converter, you access the COM port from any USB port on the computer on which the **TRACS** Standard software is (to be) installed. The Modbus data cable to be used to connect between up to nine Standard Controllers in a daisy-chain fashion and between the first Controller and the USB Adapter is 22AWG twisted pair, shielded cable, 300v.

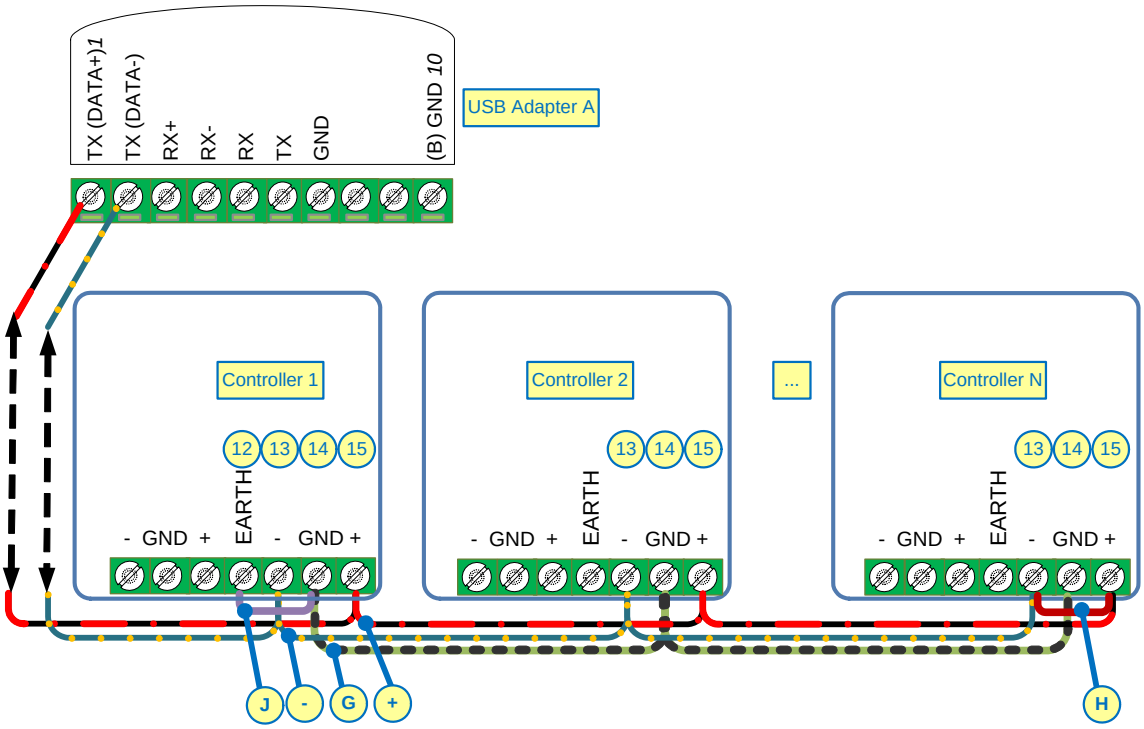

Figure 5-43: Modbus Data Cable Connection Diagram

➲ To connect the Modbus data cable:

Prepare Controllers to be Connected in a Daisy-Chain

Step 1. On each of the **Standard Controllers** in your system configuration, except the **Controller** that is to be the last in the daisy-chain, remove the **RS485 / Modbus Slave TX-** and **RS485 / Modbus Slave TX+** terminals (marked **13** and **15** in the diagram above). The last **Controller** in the daisy-chain shown in the diagram above shows the **resistor** to be left on marked **H**.

Daisy-Chain Connections Between Controllers

Step 2. To connect between each of the up to nine **Controllers**, using the provided cable, connect the designated **+** wire (marked **+** in the diagram above) from the **RS485 / Modbus Slave TX+** terminal (marked **15** in the diagram above) from **Controller 1** to the same corresponding terminal in **Controller 2**.

Step 3. For additional Controllers, connect the corresponding designated **+** wire (marked **+** in the diagram above) between the **RS485 / Modbus Slave TX+** terminal (marked **15** in the diagram above) in a daisy-chain fashion in each of the additional **Controllers**.

Step 4. Connect the designated **-** wire (marked **-** in the diagram above) from the **RS485 / Modbus Slave TX-** terminal (marked **13** in the diagram above) from **Controller 1** to the same corresponding terminal in **Controller 2**.

Step 5. For additional Controllers, connect the corresponding designated **-** wire (marked - in the diagram above) between the **RS485 / Modbus Slave TX-** terminal (marked **13** in the diagram above) in a daisy-chain fashion in each of the additional **Controllers**.

Step 6. Connect the shield wire (marked **G** in the diagram above) from the **RS485 / Modbus Slave GND** terminal (marked **14** in the diagram above) from **Controller 1** to the same corresponding terminal in **Controller 2**.

Step 7. For additional Controllers, connect the corresponding shield wire (marked **G** in the diagram above) between the **RS485 / Modbus Slave GND** terminal (marked **14** in the diagram above) in a daisy-chain fashion in each of the additional **Controllers**.

Ground Jumper on Controller #1

Step 8. In the **Controller** designated as **#1**, connect a jumper (marked **J** in the diagram above) between the **RS485 / Modbus Slave GND** terminal (marked **14** in the diagram above) and the **Earthing connector** (marked **12** in the diagram above).

Connections Between Controller #1 and USB Adapter

Step 9. To connect between the **Controller** designated as **#1** and the USB Adapter, using the provided cable, connect the designated **+** wire (marked **+** in the diagram above) from the **RS485 / Modbus Slave TX+** terminal (marked **15** in the diagram above) from **Controller 1** to the terminal on the USB Adapter marked **TX+(DATA+)*1*** (on the far left side).

Step 10. Connect the designated **-** wire (marked **-** in the diagram above) from the **RS485 / Modbus Slave TX-** terminal (marked **13** in the diagram above) from **Controller 1** to the terminal on the USB Adapter marked **TX-(DATA-) RS485** (second on the left side).

Step 11. Connect the appropriate end of the provided USB cable to the USB Adapter and the other end to a USB port on the computer on which the **TRACS Standard Software** is (to be) installed.

For additional information on **TRACS Standard Software**, see ***Configuring the TRAC Software*** on page **8-1**.

5.13.2 Setting Up the Facility System Communication Properties

To properly configure communications between your Atlantium system and control network, set up the communication properties and **COM1** port settings at the facility control system as follows:

Node Address:	2 to 254 ***
Available Commands	Function codes
Function Codes: *	0x01, 0x02, 0x03, 0x04, 0x05, 0x06, 0xF, 0x10
Support IEEE Floating Point: **	NO (register/100)
Baud Rate:	4800, 9600, 19200, 38400, 57600, 115200 ***
2 Wire	
Parity:	None
# of Stop Bits:	1
# of Data Bits	8

(*) You can read all the registers in the system at once with **0x03** (includes coils, discreet coils, holding registers and input registers).

(**) Divide the desired parameter by 100 to calculate the real flow point.

(***) Must be the same in the controller setting

To view the Modbus Registers, which govern the signalling communication from the Atlantium system to the facility control system, see **Appendix B**, ***System Messages*** .

5.14 Connecting TRACS

See the section, ***Connection to Facility Control*** on page **3-19**.

5.15 Connecting the Atlantium System to the Mains

WARNING!!!

UNDER NO CIRCUMSTANCES
SHALL ELECTRICAL WORK BE CARRIED OUT WITHOUT VERIFYING THAT ALL MAIN CIRCUIT BREAKERS OF THE ELECTRICAL LINES FEEDING THE ATLANTIUM SYSTEM COMPONENTS ARE SET TO THE OFF POSITION AND THAT NO ELECTICAL FEED IS LIVE.
DO NOT SET ANY MAIN CIRCUIT BREAKER OF THE ELECTRICAL LINES FEEDING THE ATLANTIUM SYSTEM COMPONENTS TO THE ON POSITION UNTIL ALL ELECTRICAL WIRING IS PROPERLY CONNECTED. UNCONNECTED WIRES/CABLES IN A LIVE ELECTRICAL FEED IS A HAZARDOUS SITUATION THAT CAN RESULT IN DEATH OR SERIOUS INJURY.
ONLY AFTER ALL OF THE CONNECTION TO THE MAINS ARE CARRIED OUT DO YOU SET THE MAIN CIRCUIT BREAKERS TO THE ON POSITION.

The infrastructure of the electrical connections is to have been prepared according to ***Preparing for the Electrical Wiring to the Mains*** on page **3-10**.

For installations that require the OVPD unit, the customer must provide the Power cable to the mains.

For information on the Electrical Requirements, see:

- **Section 2.** ***About the*** **RZB300 series** ***Systems***, ***Electrical Usage*** on page **2-5**
- **Section 3.** ***Getting Ready for Installation***, ***Electrical Requirements*** on page **3-7**

Mains Connection Phases

Make sure the circuit breakers before the mains are set to the **Off** position. **BEFORE** connecting the Atlantium system to the mains.
AFTER all of components of the Atlantium system is connected to the mains, set the circuit breakers to the **On** positions.

Phase 1 Connect the **Controller** to the mains.
Phase 2 Connect the Atlantium Unit's 48VDC Module to the mains (if exists)
Phase 3 Connect the Atlantium Unit's Power cable to the mains

- **Do not Stretch Electrical Cables - Avoid tension on the electrical cables. They are to be installed within conduits and must not be stretched.**

5.15.1 Connecting the Controller's Power Cable

The **Controller** comes with a power cable of 2m/6.5ft. length. For the electrical specifications, See ***The Controller*** on page **2-8.** Prepare the appropriate plug for the electrical standards of your region. Considering the distance between the **Controller** and your electrical box, you may want to replace the electrical cable with a longer one.

➲ To connect the Controller's power cable:

- Connect the appropriate plug for the electrical standards of your region.
- **Do not** plug in the **Controller** to an outlet until after the hardware installation is complete and the system is ready to be initialized. (See ***Initializing the Atlantium System*** on page **6-1.**)

5.15.1.1 Replacing the Controller's Power Cable

You can order a longer cable from Atlantium or acquire one that conforms to the specifications in **Table 3-2** on page **3-6** from a local source.

Avoid direct contact with the electronic circuit board which is sensitive to electrostatic discharge (ESD). Utilize best practices regarding ESD when replacing the power cable.

➲ To connect a longer power cable to the Controller:

Step 1. Using the appropriate screwdriver, unfasten the screws on the **Controller (A)** and carefully remove the back.

Step 1. Unfasten the Power cable from the connectors as show to the right **(4)** under **4A PWR** (corresponding to **4** in **Figure 5-22**) numbers **1**, **2** and **3** (and listed in **Figure 5-22** below **(1**, **2** and **3)**.

Step 2. Loosen the plastic nut of gland **(3)** and pull it through and out of the plastic gland at the bottom.

Step 3. Thread the longer Power cable through its plastic gland **(3)** and fasten it to the appropriate connectors mentioned above.

Step 4. Connect the Power cable's two power leads to **N and L** and connect the ground lead to **E**.

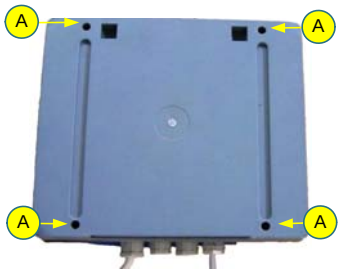

Figure 5-45: Controller's Back

Figure 5-44: Controller Terminal Connectors

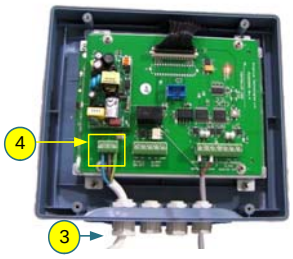

Figure 5-46: Controller's Circuit Board Power Connections

5.15.2 Connecting the 48VDC Module to the Mains

If your system includes the 48VDC Module, the voltage is 220V to 480V. The customer-supplied cables are to be connected either L-L or L-N.

To connect the mains cable to the 48VDC module:

Step 1. Thread the mains cable through the gland of the 48VDC Module **(D)**.

Step 2. Connect the wires to the connectors:

- Brown wire to the gray terminal connector L1 **(E)**
- Blue wire to the blue terminal connector N/L2 **(F)**
- yellow wire to the yellow terminal connector GND **(G)**

Step 3. When you are ready to activate the system, turn the circuit breakers to the **On** position.

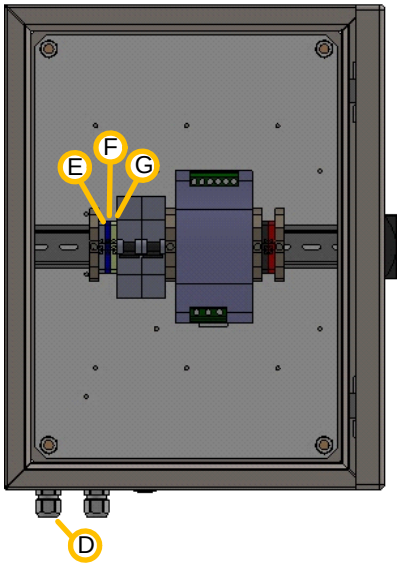

Figure 5-47: Connecting the Mains to the 48VDC Module

5.15.3 Connecting the Atlantium Unit's Power Cable

The Atlantium Unit comes with a power cable of (5m/15ft.) or 10m/30ft (according to you order.) Prepare the appropriate cables and plugs for the facility mains connection according to the electrical standards of your region. Considering the distance between the Atlantium Unit and your electrical box, you may want to replace the electrical cable with a longer one.

A certified electrician is required to perform these procedures. Follow your local regulations.
Do not connect the Unit's Power cable to an outlet until after the hardware installation is complete and the system is ready to be initialized. (See ***Initializing the Atlantium System*** on page **6-1.**)

To connect the Atlantium Unit's power cable:

- Connect the appropriate plug for the electrical standards of your region and connect it to a mains outlet.
- **Do not** connect the Unit's Power cable to an outlet until after the hardware installation is complete and the system is ready to be initialized. (See ***Initializing the Atlantium System*** on page **6-1.**)

5.16 Installation Check List

When you are ready to schedule the Atlantium technician to commission the Atlantium system, complete the check list below.

Send this check list together with digital photos of every angle of the installed system to your Atlantium representative. It generally requires at least 2 weeks after the check list has been completed to schedule the Atlantium commissioning.

Table 5-7: Atlantium System Installation Check List

Item	Done
■ The System is installed: ❑ Vertically - Water is flowing upward ❑ Horizontally	
■ The Atlantium Unit, Ballast Module and other components are located in their final position ■ The Atlantium Unit and all of its components are not located where they may be in contact with direct water or chemical dripping ■ Ballasts are installed in a vertical position. ■ All Ballast Module connections are complete. ■ The electrical cables between components are not stretched.	❑ ❑ ❑ ❑ ❑
■ All of the System components are securely installed and have sufficient service clearance on all sides (according to the ICDs).	❑
■ All power preparations are complete and Power connects are wired as instructed in this guide. ■ Correct voltage was measured where the Power connects to the Ballast Module ■ Voltage rate _____ Number of phases _____	❑ ❑
■ The Atlantium Unit is connected to the water pipes according to the Installation plan developed by facility engineers and Atlantium personnel. Proper pipe lengths (Inlet - 10D, Outlet - 5D) are installed.	❑
■ Water flows through the Atlantium Unit - The Unit has been checked while full of water and no bubbles or leaks exist in the system. The system is balanced, supported and pressure stable (no vibration, etc.). No known water hammers or pressure above 10 bars are on the line.	❑
■ All piping accessories are installed and wired as instructed in this guide (e.g., Inlet/Outlet valves, sampling valves, draining valves, CIP valves, air release valve, etc.) ❑ Sampling Valves ❑ CIP Ports ❑ Draining Valves ❑ Air Release Valves	❑
■ A flow meter or flow switch is installed and the electrical and data connection are complete. ❑ If flow meter: 4 - 20 mA signal and Com wires are connected as instructed in this guide. ❑ If flow switch: 2 wires from the flow switch are connected as instructed in this guide. ❑ A 4 - 20 mA signal from the PLC is installed.	❑
■ The **Controller** connects is complete. All supporting features (e.g., General Alarm, External On/Off, etc.) and wiring were installed according to the Installation plan based on the instructions in this guide.	❑
■ All Connection Box connections are complete. All supporting features (e.g., flow meter or flow switch, auto valves open/close) and wiring were installed as instructed in this guide.	❑
■ For systems with **TRACS**, network connection was installed between **TRACS** the **Controller**.	❑
■ **You are scheduling an electrician to be on site and available during the System commissioning (a must or the installation cannot be completed).**	❑
■ To be sent to Atlantium with this checklist, attach photos of the following: ❑ Atlantium Unit ❑ Ballast Module(s), **Controller** and other components ❑ Accessories (Flow meter or flow switch, CIP ports, Sampling valves, etc.)	

Customer Approval

Name of Customer's authorized representative: _____

Position: _____

Signature of Customer's authorized representative: _____

Date: _____

6 Initializing the Atlantium System

The Atlantium system starts up with the initialization of the **Controller.**

➲ To start up the Atlantium system:

Step 1. Check that the Ballast Module power cable is connected to the main power source.

The system powers up and the **Controller's** touch-screen monitor is activated, displaying the **Main Operation** screen . The **Lamp Power** button on the the bottom Left is on the **Off** position.

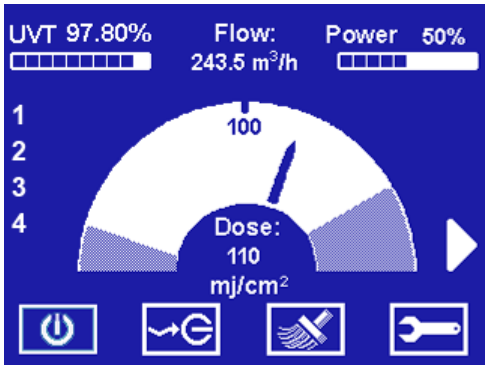

Figure 6-1: Initial Main Operation Screen

7 Configuring the Controller

The Standard **Controller** controls the operations and dose measurements of the Atlantium system.

The System uses a validated algorithm to measure the dose and display it in real time. Depending on how you choose to run your process, you can configure the controller to maintain a specific dose or to simply use a particular power level and inform you if it does not reach the dose you designate.

The **Controller** provides a real-time display of operational data.

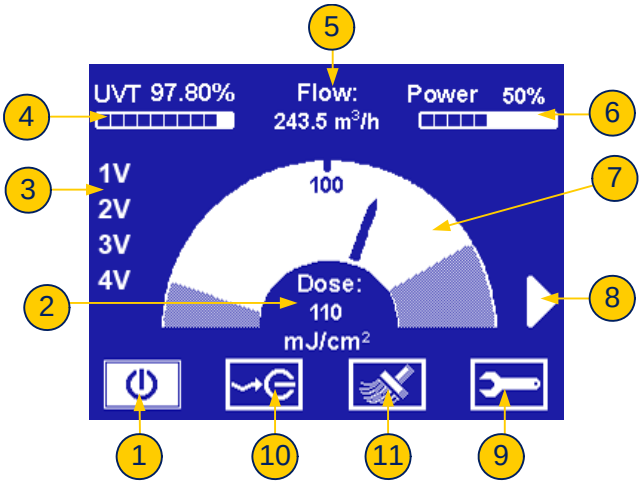

Figure 7-1: Initial Main Operation Screen

Table 7-1: Main screen components

#	Item
1	**Lamp Power Button** - upon Controller initiation, is on the Off position. After being pressed, tuns white, showing that the lamps are working. It can be used to shut it down in an orderly manner.
2	**Dose** - the **Op**(erate) **At d**ose is the dose the user wants the Unit to achieve and maintain. Generally, it should be set about 10-20% over the minimum dose to assure stability and on-spec operation in the case of small variations of water quality or flow. You should confer with the Atlantium application engineer in setting this number based on the capacity of the Unit, variability at the site and power considerations. When the actual dose is below the **Op**(erate) **At d**ose, the number rounds down. Otherwise, it rounds up.
3	Numbers **1-4** represents up to four lamps included in the System. **V** indicates lamps in operation. **X** indicates lamps in not operating. When the System is in an initial state, no indicator appears.
4	**UVT** - scale exhibits the current quality of the water flowing through the system, and the amount of the UV light absorbed by the water, compared to the amount UV available for disinfection. If the UVT percentage factor is high, the clarity factor of the water is high, and vice versa.
5	**Water Flow** - Number shows the current rate of water flowing through the Unit, based on a flow signal (for variable flows) or a constant volume (for on/off steady flow applications).
6	**Power** - displays the current power level. The Unit's electronic ballast varies continuously (not in limited steps) to maintain the dose and respond to changing conditions.
7	**Dose Gauge**- represents the total system dose. The gauge has two different linear functions - from the dose setting down and from the dose setting up. The minimum and maximum allowable dosage levels are user-defined.
8	Press to access the Lamps screen.

Table 7-1: Main screen components

#	Item
9	Press to access Settings and Technician protected screens via Password entry screen.
10	**External Operation button** - appears on the main operating screen only if the External On/Off feature is activated in the main Settings screen. If the feature is enabled, the system can be turned on or off from the facility's External On/Off switching mechanism. When the feature is disabled, the system may be turned off only from this screen or on the (optional) **TRAC Software**.
11	**Cleaning System button** - appears on the main operating screen only if the Cleaning feature is included in the system. Enables/disables the optionally-installed Cleaning mechanism for cleaning the Unit's quartz tubes.

Plan your **Controller** configuration with your Atlantium Application Engineer to assure that the system performs properly and achieve its objectives. Review the Configuration Printout with the Atlantium Technician who is commissioning the site to make sure the settings are understood and correct. The Atlantium Technician configures the Controller. Many of its settings can be changed as experience suggests improvements in the operations and processes.

➲ To access the Settings screen:

Step 1. From the **Main Operations** screen, press . The **Password** screen appears.

Step 2. Using the numbered keys, enter the password (default password is **1357**) and press **OK**. The Settings screen appears.

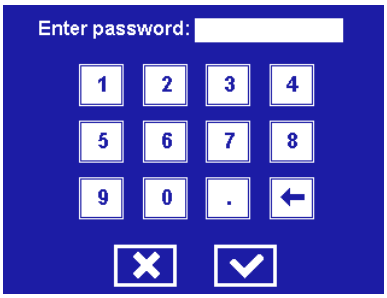

Figure 7-3: Password Screen

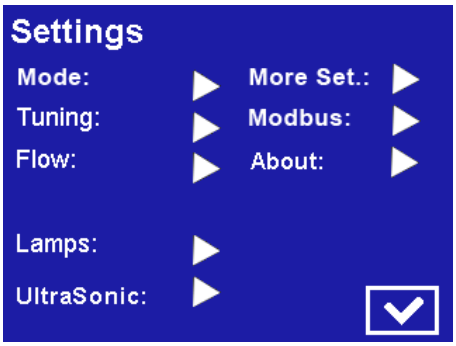

Figure 7-2: Settings Screen

7.1 Configuring the Operation Mode

The **Controller** provides Atlantium system has two operational modes. Determine which suits your objectives and facility processes: of control:

- **Power Mode** - The system is set to operate at a particular power level. Under all circumstances, the system operates at the specified designated power level. Power mode is the right choice if maintaining a particular dose is not the objective. It is often chosen where energy consumption concerns are paramount or when the maximum disinfection power is needed at all times and concern that low flows might give high doses or that high flows might give lower doses is not an issue (i.e., maintaining a particular dose is not the objective).
- **Dose Mode** - The system is set to operate at a particular dose. It maintains the designated dose as conditions allow and generally is set to alarm when the dose is not achieved.

➲ To set the Operation Mode:

Step 1. Access the **Controller's** Settings screen as detailed above and for **Mode**, press ▶. The Mode Setting screen appears

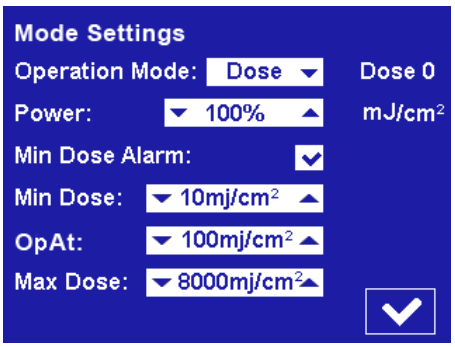

Figure 7-4: Dose Settings Screen

- **Dose mode**:
  - a For **Operation Mode**, use the ▲▼ arrows to select **Dose**.
  - b Ignore the **Power %** parameter.
  - c To enable an alarm to be triggered should the Dose reach the minimum allowed, press the **Min Dos Alarm** box until a checkmark appears.
  - d For **Min Dose**, press the ▲▼ arrows to set the lowest allowable dose in mJ/cm^2. This sets the linear function for the left side of the dose gauge and is the dose the Unit maintains. If it is not maintained, it dips into the shaded area, and, if configured to send an alarm, it does so.
  - e For **Op**(erate) **at**, press the ▲▼ arrows, to set the operating dose. This generally includes a safety factor so that the Unit does not operate at the minimum margin and does not send false alarms when the water quality or flow quivers or changes rapidly.
  - f For **Max Dose**, press the ▲▼ arrows, to set the maximum UV dose limit. This sets the linear function for the right side of the gauge and defines when the arrow goes into the shady area. In cases where there is low flow, unusual water chemistry or the potential for overheating, high dose can indicate impending issues.
  - g Press ✓ **OK**. The settings are saved and you are returned to the Settings screen.
- **Power mode**:
  - a For **Operation Mode**, use the ▲▼ arrows to select **Pwr**.
  - b Set the **Power %** using the ▲▼ arrows.
  - c If you want to be alerted to the dose going beneath a value, set it here as the **Min Dose**. Press the ▲▼ arrows, to set the lowest acceptable dose in mJ/cm^2. This configures the left side of the gauge, but the system does not change the power or operation to achieve or maintain this dose. It is simply for information. If you set the **Minimum Dose alarm** (see below) it also triggers an alarm if the Unit falls below this dose.
  - d Ignore the **Operate at** parameter.
  - e For **Max Dose**, press the ▲▼ arrows, to set the maximum UV dose limit. This sets the linear function for the right side of the gauge.
  - f To enable the alarm trigger if the unit goes below the minimum allowed, press the **Min Dos Alarm** box until a checkmark appears.
  - g To save your changes and return to the Settings screen, press ✓ **OK**.

7.2 Configuring the Flow Settings

The Flow signal and related settings are critical for determining the dose and assuring that the system is working within design guidelines. The accuracy and tolerance of the flow meter measurement should match the **Controller** interpretation of the flow signal.

➲ To configure the flow settings:

Step 1. Access the **Controller's** Settings screen as detailed above.

Step 2. For **Flow**, press ▶. The Flow Settings screen appears.

Step 3. For **Flow Input**, use the ▲▼ arrows to select either **Meter** or **Switch**.

- If you selected **Switch**:
  - Mark the electronic polarity as **Normally Closed** or **Normally Open**.
  - The constant flow number is set by the Atlantium Technician in **Technician 2 Screen**.
- If you chose **Meter**:

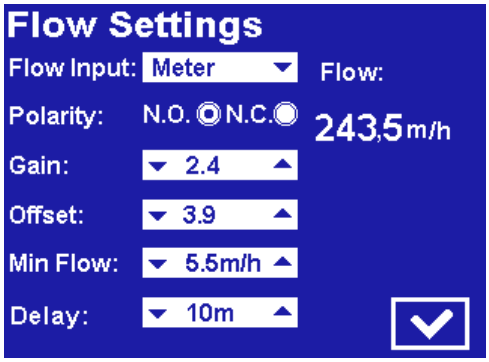

Figure 7-5: Flow Settings Screen

  a To set **Gain**, you need the meter's maximum-design flow rate found on the flow meter's datasheet. You need it in m^3/h, so if it is written in any other unit of measurement, you must convert it to m^3/h.

  b In the **Gain** field, using the ▲▼ arrows, enter the meter's maximum-allowed flow rate divided by 100. (If the max flow rate is 100 m^3/h, enter the value **1**. Convert any value into m^3/h values to make this calculation.)

  c To set **Offset**, turn off the flow meter and note the reading on the screen in the right hand corner. If it is not zero, using the ▲▼ arrows, enter the reading. This assures that the system registers zero in the dose calculation when the flow meter is turned off and compensates for any measurement anomalies.

  d For **Min Flow**, using the ▲▼ arrows, enter the minimum flow for standard operations. Set it, making sure to convert your calculations if necessary to use the same units of measurement as are on the screen. Set this number based on process and unit considerations. The Unit cannot run without flow and in some cases, low flow may be indicative of some upstream issue. Once the Low flow number has been reached, the unit reduces power to the lowest possible power setting until the Delay has passed, and then shuts down. If the flow increases before the delay period elapses, the Unit returns to its normal operation. If the Unit shuts down, if the **Restart on Flow** is enable (see **Step 7.** on page **7-6**.), it resumes operations when normal flow is restored, otherwise it needs to be turned on manually to return to normal operations.

Step 4. For **Delay**, using the ▲▼ arrows, enter the number of minutes the system should wait before shutting down in the event of flow below the minimum.

Step 5. To save your changes and return to the Settings screen, press ☑ **OK**.

7.3 Configuring Cleaner

If Included in the system, determine how often you want to use the Cleaner and set the appropriate parameters. If not included, ignore these settings.

➲ To configure the Cleaner:

Step 1. Access the **Controller's** Settings screen as detailed above.

Step 2. For **Cleaner**, press ▶. The Cleaner Setting screen appears.

Step 3. For **Every**, using the ▲▼ arrows, set how often - in hours - the cleaning should run.

Step 4. .To save your changes and return to the Settings screen, press ☑ **OK**.

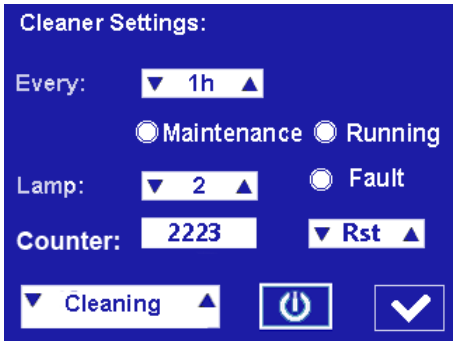

Figure 7-6: Cleaning Settings Screen

7.4 More System Settings

Access the following settings through the More Settings screen:

- Set the maximum temperature for the Atlantium unit.
- Enable/Disable Cleaning- to manually disable/enable the Cleaning system
- General Alarm - to configure a facility general alarm to be triggered when there is a system alarm or if you opt for a minimum dose alarm
- External On/Off - to configure facility control of the Atlantium system

➲ To configure more system settings:

Step 1. Access the **Controller's** Settings screen as detailed above.

Step 2. For **More System Settings**, press ▶. The System Settings screen appears.

Step 3. To set the maximum temperature threshold for the Atlantium unit, for **Max Temperature,** using the ▲▼ arrows, set the temperature.

Step 4. To manually disable the Cleaning system, press the **Cleaner En** checkbox until the checkmark is removed. To re-enable the Ultrasonic Cleaner, press the checkbox until a mark appears.

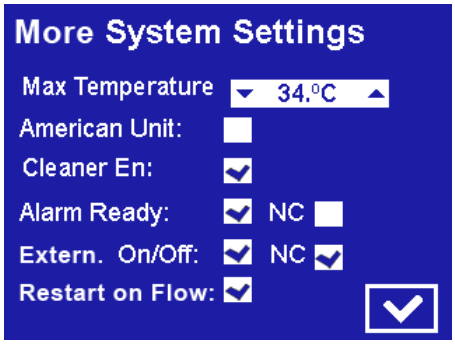

Figure 7-7: More System Settings Screen

Step 5. If your system configuration includes a facility general alarm, or system ready configuration, for **Alarm** mark the left checkbox. For **Ready**, leave the left checkbox unmarked. For electronic polarity **Normally Closed** mark the **NC** checkbox or for **Normally Open** leave the **NC** checkbox blank.

Step 6. If your system configuration includes a facility external control, mark the first checkbox.

- For electronic polarity **Normally Closed** mark the **NC** checkbox or for **Normally Open** leave the **NC** checkbox blank.
- For regular wiring, set according to the table in ***External On/Off - Additional Notes*** on page 5-14

Step 7. To set the system to restart at the configured settings when the flow returns to normal rate, press the **Restart On Flow** checkbox until a mark appears. When the checkmark is marked and the system shuts down because of low flow the main power remains on and a flow label on the main screen flashes indicating the system is waiting for a normal flow rate to resume). When normal flow rate returns, the system restarts and resumes operation according to the configured settings automatically.

Step 8. To save your changes and return to the Settings screen, press ☑ **OK**.

7.5 Configuring the Modbus

The Modbus screen displays the software version and other system version information.

Configure the Modbus node address assigned to this system in the **Controller**. The Modbus enables communication with the rest of the facility and facilitates integration of the Atlantium Unit into the overall process.

➲ To configure the Modbus:

Step 1. Access the **Controller's** Settings screen as detailed above.

Step 2. For **Modbus**, press ▶. The Modbus screen appears.

Step 3. For **Address**, using the ▲▼ arrows, set the Modbus address node to a number as per the serial address setting in your facility.

Step 4. For **Baudrate**, using the ▲▼ arrows, set the appropriate baud rate for this system. The options are:

- 115200
- 19200
- 57600
- 9600
- 38400

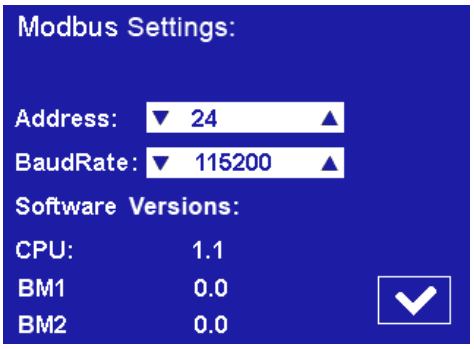

Figure 7-8: System Settings Screen

The software version and other system version information is displayed on this screen.

Step 5. To save your changes and return to the Settings screen, press ☑ **OK**.

7.6 Configuring the Technician Settings

As a precautionary measure, the Technician settings in the **Controller** should be verified.

➲ To configure the Technician Settings:

Step 1. From the **Main Operations** screen, press ⊶. The **Password** screen appears.

Step 2. Using the numbered keys, enter the password (default password is **8888**) for the Technician Screens and press ☑ **OK**. The Technician 1 screen appears.

Step 3. For **System**, verify that the correct Atlantium system is defined.

Step 4. For **Auto On**, to set the Atlantium system to restart automatically when power is restored after a facility-wide power failure and reactivate according to the most recent settings, press the checkbox until a mark appears.

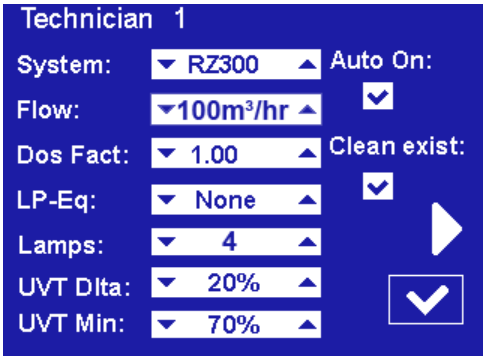

Figure 7-9: Generic Technician 1 Screen

Step 5. If the system includes the cleaning system, for **Clean exist**, press the checkbox until a mark appears.

Step 6. If the system includes a **flow meter**, for **Flow**, set the maximum flow rate using the ▲▼ arrows. Otherwise, ignore this parameter.

Step 7. If the system uses a **flow switch** instead of a **flow meter**, in the **Flow** field, set the constant maximum flow rate using the ▲▼ arrows.

Be Careful when using this screen as changing the unit time or other errors can substantially impact your system!

Step 8. If your system contains PG quartz, the Dose Factor must be configured. For **Dos Fact**, set the Dose Factor using the ▲▼ arrows.

Step 9. For facilities that require Dose monitoring in Low Pressure Equivalency terms, for **LP-Eq**, use the ▲▼ arrows to set the Low Pressure Equivalency figure. The Dose is expressed as a Low Pressure Equivalent PDM system.

Step 10. Verify that the system is configured correctly for the number of lamps. Use the ▲▼ arrows to set the correct number.

Step 11. To access the **Technician 2** screen, press the ▶ arrow to the right.

Step 12. Verify that for each lamp, the parameters listed for UVT and UVIS appear in the normal range.

Step 13. Verify that the temperature displayed is within the norm. Each installed and operating lamp's temperature is displayed. An **N/A** appears for a lamp that is not operating or not installed.

Step 14. Ignore the **Power** option. It is used for testing only.

Step 15. Verify that for each lamp the column on the right is set to **ON** (enabling the lamps).

Step 16. To save your changes and return to the Settings screen, press **OK**.

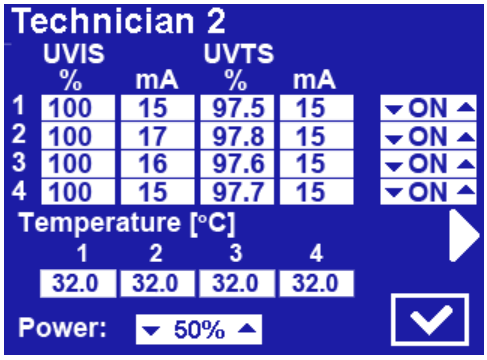

Figure 7-10: Technician 2 Screen*

For a system with less than four lamps, the relevant rows are displayed only.

For Temperature, for less than four lamps, only the fields for the installed lamps display the temperature. The other fields display N/A.

8 Configuring the TRAC Software

The optional **TRAC Standard Software (TRACS)** controls up to nine separate Atlantium systems. The **TRAC Software** may be installed on a PC (provided by Atlantium) or on a computer terminal either on-site operating via direct connection or via Ethernet LAN, or from a remote location outside the facility using the Internet.

The **TRAC Software** logs all events and has no capacity restrictions beyond the storage capacity of the **TRAC Software** itself. The database can be backed up and managed in accordance with site procedures and regulatory requirements.

- **Broad and deep analysis capabilities** – The **TRAC Software** is designed with an easy-to-use interface that enables users to obtain and analyze all sorts of system data – power consumption, lamp operation, and much more. It can email current or historical events, logs and graphs or send them to a local printer.
- **Automated reporting capabilities** – The **TRAC Software** draws on the database for information and presents it in pre-formatted reports. These can be generated efficiently and routinely.

The **TRAC Software** is typically installed on customer-designated computers and includes two installations:

- The **Remote Operating PC** (optional Atlantium-supplied computer) directly controls the Atlantium units, collecting real time data and storing in the database. It provides a full configuration interface and reporting functionality.
- The **Remote Viewer PC** (customer-supplied computer) allows you to view the data collected from the **Operating Console** and produce reports from this data. It is not directly connected to the currently operating units.

For the system requirements for installing the **TRAC Software**, see on page **3-19**.

- If you are installing **TRAC Software** on a facility computer terminal (not provided by Atlantium) consult an Atlantium representative and your IT administrator to assure SQL permissions are set to allow access.
- The **TRAC Software** installation and configuration is typically carried out after the **Controller** is configured. See ***Configuring the Controller*** on page **7-1**.
- For details about connecting up to nine **Standard Controllers** to the **Remote Operating PC** on which **TRACS Standard** is (to be) installed, see ***Modbus Communication Connections*** on page **5-25**.

8.1 Installing the USB Driver

The driver for the USB adapter used to connect between the Standard Controller and the computer station is provided on the installation disc in the directory labeled **USB Driver.**

➲ To install the USB Driver:

Step 1. Access the installation disc using the CD drive of the computer on which the driver is to be installed.

Step 2. On the main directory, locate and open the folder labeled **USB Driver**.

Step 3. Double-click the file, **PL2303_Prolific_DriverInstaller_vxxx.exe** and follow the straightforward screens of the installation wizard that opens.

8.2 Installing TRACS

The supplied installation disc contains the following:

- **dotNetFx40_Full_x86_x64.exe** - the dot net installation file
- **SQLEXPR.EXE** - the SQL Express installation file
- **Setup.exe** - the TRAC Software installation file
- **Setup.ini** - the TRAC Software
- **SQLServer2005_SSMSEE.msi** - the SQL Server Management Studio installation file for win XP & Win 7 32bit (Optional)
- **SQLServer2005_SSMSEE_x64.msi** - the SQL Server Management Studio installation file for Win 7 64bit (Optional)

The installation software automatically identifies your system whether Window XP or 7, 32 or 64 bit.

➲ To install TRACS Standard:

Step 1. Copy the installation folder from the supplied disk to your desktop.

Step 2. Double-click the **Setup.exe** file. The Installation sequence is initiated. Follow the directions of the Installation wizard. The wizard install all of the application needed to run the **TRACS Standard software**.

The **TRACS** application is installed and ready for use.

8.3 Activating the TRAC Software

In regular operation, when the **TRAC Software** is activated, communications is established with the **Controller** of each of the Atlantium units defined in the **TRAC Software** (See **Section 8.4 on** on page **8-3**). The **TRAC Software** receives the settings previously configured in the **Controller**.

➲ To activate the TRAC Software:

- Restart the computer. The **TRACS** application opens automatically displaying the Monitor screen.

8.4 About the TRACS Screens

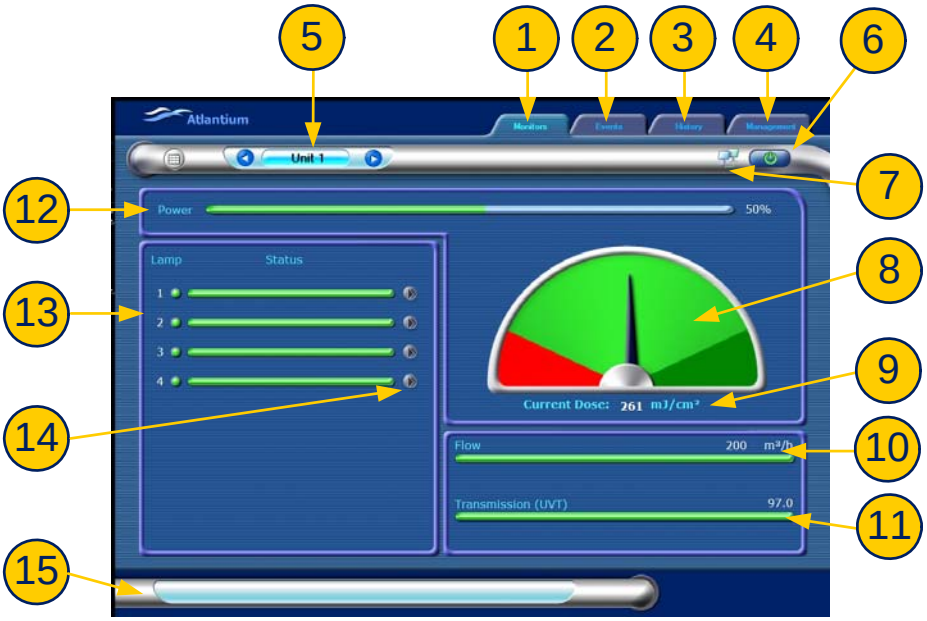

Figure 8-1: The TRACS Main Monitor Screen

Table 8-1: TRACS Main Monitor Screen Details

1	**Monitor** - Screen displays the current operation of the system in real time. Individual Units can be displayed or all of the Units.
2	**Events** - Screen displays all notable issues and events and provides trouble shooting guidance and assistance.
3	**History** - Screen displays graphs all current operational data in real time as well as provides access to historical data.
4	**Management** - Controllers screen contains the communications settings to the **Controllers** of each of the Atlantium Units to be controlled by this **TRACS**. - Settings screen provides the database and logging options.
5	Selects the Atlantium Unit for which to display the details.
6	**Main Unit Operation Button** - ON/Off toggle button turns on/off the Atlantium unit. lamp(s), cooling system, computer control (UV power, etc.) startup is in an orderly manner.
7	Shows connectivity with the **Controller.** When there is no connectivity, the screen displays an **x**.
8	**Dose Gauge** - Represents the total system dose. The gauge's red area represents the under minimum allowable dose. The dark green area represents the user's set maximum allowable dose. The indicator in the middle of the gauge points to the current dose. The gauge has two different linear functions - from the dose setting down and from the dose setting up. The minimum and maximum allowable dosage levels are user-defined.
9	Displays the current dose in mJ/cm^2

Table 8-1: TRACS Main Monitor Screen Details

10	**UVT (Transmittance)** - Scale shows the amount of UV light transmitted through the water. If the UVT percentage factor is high, the transparency of the water in UV light is high, and vice versa.
11	For those operating in EPA mode, the Atlantium Unit becomes off spec if the UVT goes lower than the validated UVT, in which case the system can be set to either divert (to drain or recirculation tank), shutdown, or operate off spec. **Water Flow** - Scale exhibits the current rate of water flowing through the Unit.
12	**Power** - Displays the current power Level
13	**Status Indicator Bar** - Displays the operational status of the lamps. This quantifies how much UV the lamp is generating compared to how much it generated at the same power level when it was new. Lamps are listed according to their set IDs.
14	**Current Lamp Information Viewing Button** - Displays the current operating power and lamp age in text.
15	**Alert Display** - Displays system-generated messages.

8.5 Viewing Lamp Details

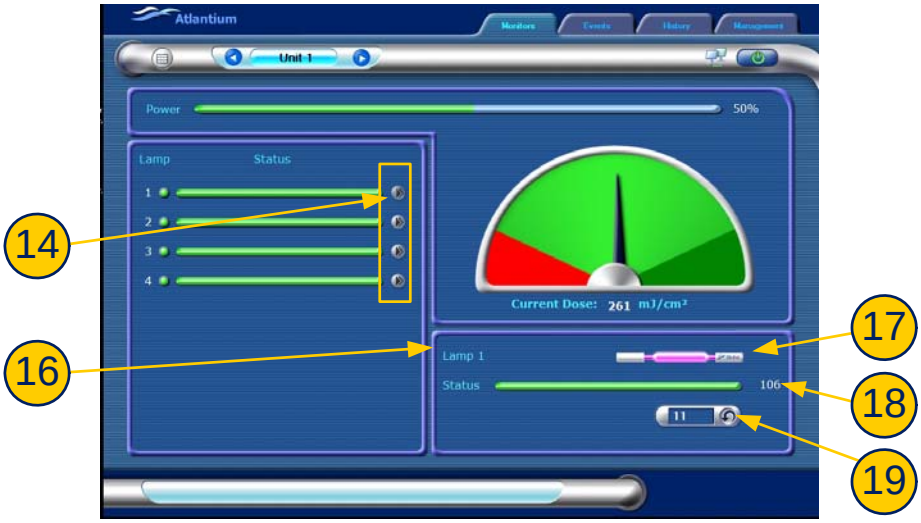

Figure 8-2: The TRACS Monitor Screen

Table 8-2: TRACS Main Monitor Screen Details

14	**Current Lamp Information Viewing Button** - Displays the current operating power and lamp age in text.
16	**Right-Bottom Information section** - When a lamp is selected using the **Current Lamp Information Viewing Button** of a lamp, the number of the selected lamp appears here and more information on the selected lamp is displayed.
17	Displays how much UV the lamp is generating compared to how much it generated at the same power level when it was new.
18	Displays the operational status of the selected lamp.
19	Displays the age of the lamp and the button to restart the age count.

➲ To view details of a selected lamp:

- On the main screen, click the **Current Lamp Information Viewing Button** for the desired lamp. In the Right-Bottom Information section, additional information is displayed for the selected lamp.

8.6 Configuring the Atlantium Unit Communications ID

The Management tab **Controllers** screen displays the list of nine Atlantium units that can be configured to be controlled by the **TRAC Software**.

The **Controller** of each Atlantium unit has an assigned dedicated Modbus address which is used for communications with **TRACS** (See ***Configuring the Modbus*** on page **7-6.**)The **Controller** of each Atlantium Unit is connected directly to the **TRAC Software**.

The same Modbus address is used in each of the Atlantium units' **Controller** must be entered in **TRACS** per unit.

The Baudrate must be set to the same rate as that set in the **Controllers**.

Figure 8-3: TRACS Management Tab, Controllers screen

➲ To configure the baudrate and COM port:

Step 1. At the bottom of the **Management** tab **> Controllers** screen (if needed, using the ◀ / ▶ buttons, access the Controller screen), For **Baudrate**, from the dropdown list, select the baudrate that is identical to that set in the **Controllers** of the Atlantium Units to be attached to this **TRAC Software**. See See ***Configuring the Modbus*** on page **7-6.**.

Step 2. For **COM Port**, from the dropdown list, select the COM port to which the USB adapter is connected.

Step 3. To save your changes, in the bottom right, click Submit. The changes are saved.

➲ To configure the Atlantium Unit Communications ID:

Step 1. On the **Management** tab **> Controllers** screen (if needed, using the ◀ / ▶ buttons, access the Controller screen), beginning with Unit #1, mark the Unit number checkbox. (For configuring additional Atlantium units, mark the next vacant Unit number.)

Step 2. In the **Name** column, enter text to identify the Atlantium Unit.

Step 3. In the **Modbus** column, enter the Modbus Address of the **Controller** associated with the Atlantium unit. (See ***About the TRACS Screens*** on page **8-3.**)

Step 4. To save your changes, in the bottom right, click Submit. The changes are saved. The **TRAC Software** recognizes the **Controller** Modbus address. and remove the red **X** from the computer icon.

Step 5. To verify that and communication is established between the **Controller** and **TRAC Software,** click the **Monitor** tab and note that realtime data is displayed in the Monitor screen components.

Figure 8-4: TRACS Management Tab, Controllers screen

8.7 Configuring the Database Collection Settings

The database collection settings of the **TRAC Software** include:

- Setting the Logging type
- Setting the time intervals for the collection of data from the system
- Enabling the backup and setting the database location
- Changing the password
- Setting the operation mode

➲ To configure the database collection settings:

Step 1. To set the Logging type:

By Interval

a For the database log to poll the system per interval, click **Interval**.

b In the adjacent box, set the time interval in seconds. The minimum interval is 30 seconds.

By Delta

- For the database log to collect updated data as data changes, click **Delta.**

Step 2. To set the units of measure, click the appropriate options for your facility:

- Metric
- Inch

Step 3. Click **Submit**. The changes are saved.

Figure 8-5: TRACS Management Tab, Settings Screen

8.7.1 Setting System Startup to Include TRACS

TRACS should be set to automatically restart upon system reboot.

To do so please follow the next steps:

Step 1. Create a shortcut of the TRACS startup icon from the **Atlantium PC __** folder in the path: **C:\Program Files\Atlantium\Atlantium Standard PC XY**

Step 2. Copy and past it in the startup folder in the next path: **C:\Documents and Settings\All Users\Start Menu\Programs\Startup**.

Step 3. Reboot your computer and see that TRACS application starts up automatically (it may take a few minutes).

8.7.2 Change the PC Power Settings

For optimal performance, configure the Power settings on the PC where the TRACS is installed according to the directions in this section.

Windows XP

➲ **To change the PC Power settings:**

Step 1. From the Start menu, access **Control Panel >Power Options**.

Step 2. Change the following settings to N**ever**:

- Turn off monitor
- Turn of hard disk
- System standby

Windows 7

➲ **To change the PC Power settings:**

Step 1. From the Start menu, access **Control Panel >Hardware and Sound >Power Options**

Step 2. For any selected Power Option, click **Edit Plan Settings**.

Step 3. Change the following settings to N**ever**:

- Sleep Mode
- Turn of display
- Dim the display

Step 4. Click **Change advanced power settings**. The Power Options Advanced Settings dialog box is displayed.

Step 5. To expand **Hard disk**, click **+** and to expand **Turn off hard disk after**, click **+**.

Step 6. Change the following settings to **Never**:

- On battery
- Plugged in

Step 7. To expand **Sleep**, click **+** and to expand **Sleep After Allow hybrid sleep**, and **Hibernate After**, click **+**.

Step 8. For each one, change the following settings to **Never**:

- On battery
- Plugged in

9 First Time System Activation

Following **Controller** and **TRAC Software** configuration, completing the system setup includes the following major steps:

- Cleaning the Atlantium Unit (See below)
- Introducing Water into the Unit (See below)
- Igniting the Lamps (See below)
- Initiating the Water Flow (See page **9-2**)
- Adjusting the Auxiliary Equipment (See page **9-2**)
- System Tuning (See page **9-2**)
- Installation QA (See page **9-2**)

9.1 Cleaning the Atlantium Unit

The inner surfaces of the Atlantium Unit are to be cleaned via the CIP process at installation, before starting up and proceeding with the commissioning phase. Follow the directions in ***Cleaning In Place (CIP)*** on page **11-2**.

9.2 Introducing Water

The water is introduced into the unit before full activation.

Water hammer can cause damage to any hydraulic system, including the Atlantium Unit. **Make sure that water hammer is NOT present in your facility's water line.**

To prevent water hammer, consult your system engineer and check your facility system procedures, including:

- When starting the water flow when the lines are empty, keep valves open so that the air in the pipes has a simple release pathway.
- Sudden valve closures can cause water hammer. Make sure that valves close gradually enough to avoid this problem.
- Ensure that all pumps that impact the Atlantium system employ soft start-up procedures.

➲ To introduce water:

- Open the **Inlet valve** and using the **Viewport** on the Unit, check that the quartz chamber fills with water completely.

9.3 Igniting the Lamps

The lamps of the Atlantium Unit are ignited to commence live system operation.

- **Temporarily, the caps on the lamps must be open, During this time, use Caution floor signs at a distance of 1m/40inch from the Atlantium Unit that warn passersby against possible UV light exposure and not to approach without proper eye and skin protection.**
- Wear white cotton gloves.
- Wear long sleeves rolled down to your wrist.
- Where appropriate eye protection, such as containing polycarbonate lens that meet EN166, CAN/CSA-Z94.3-02 and/or Z87.1 standards.
- **DO NOT look directly into openings that emit UV light.**

➲ To ignite the lamps

Step 1. **Place Caution floor signs at a distance of 1m/40inch from the Atlantium Unit that warn passersby against possible UV light exposure and not to approach without proper eye and skin protection.**

Step 2. Open each of the lamp's caps (2 on each side of a lamp). For the location of the lamps' caps, see Figure **11-7** , on page **11-11**.

Step 3. To ignite the lamps, from the **Main Operations** screen, press the **Lamp Power** button . The button changes to white and the lamps are ignited.

9.4 Initiating the Water Flow

When initiating the water flow, the water may be set to drain out or collect in a tank until the system is fully operational. Once the entire installation and QA testing is complete, the water is set to flow normally as part of the facility operation.

➲ To initiate the water flow:

Step 1. Open the relevant valve that allows water to flow through the Atlantium unit. This may be the draining valve or bypass valve.

Step 2. Open the viewport and verify that the Unit is completely filled with water and that no air gaps and no air bubbles exist.

Step 3. From the **Main Operations** screen, press . The **Password** screen appears.

Step 4. Using the numbered keys, enter the password (default password is **1357**) and press **OK**. The Settings screen appears.

Step 5. For **Flow**, press ▶. The Flow Settings screen appears.

Step 6. Verify that the Flow reading on the right is within normal range. If it is not, check the connections between the Atlantium system and the Flow meter. See ***Cabling Components*** on page **5-20.**

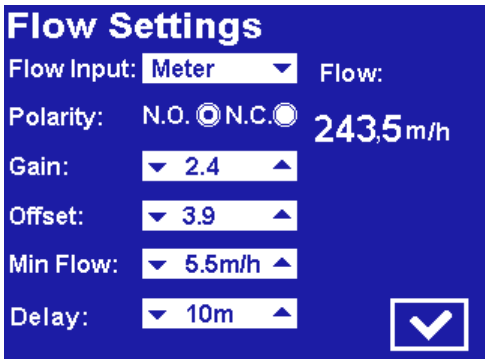

Figure 9-1: Flow Settings Screen

9.5 Adjusting the Auxiliary Equipment

All relevant auxiliary equipment must be adjusted at this time, i.e., flow meter, automatic valves, PLC, etc. Refer to the manufacturers' user documentation of the relevant equipment.

If your configuration includes a flow meter, check that the value of the flow displayed on the **Controller** matches the reading on the flow meter. See page **7-4** if they do not match.

9.6 System Tuning

The Atlantium system must be tuned via the **Controller**. Follow the instructions in ***System Tuning*** on page **11-24**.

9.7 Installation QA

Atlantium personnel performs a quality assurance procedure following which the Atlantium system is ready for regular facility operation.

10 Operating the Atlantium System

This section details how to operate the system and handle basic and periodic routines to be carried out by Atlantium trained the local staff.

For system without **TRAC software** and/or optional **Cleaning**, disregard the irrelevant sections.

- Unauthorized servicing or modification of this system in a manner not specified in this manual could expose personnel to potential electrical or other hazards.
- Improper use or adjustment of this system may invalidate the service warranty agreement.

10.1 Operational Guidelines

Follow these guidelines for smooth Atlantium System operations:

- **Incoming Water Supply** - Be alert about incoming water supply. If you do not have pre-treatment, be alert to reports of contamination by upstream slugs of mud, particles, oil, etc.

  If the water source was not previously in operation or the line is new, - flush the line prior to introducing water into the Atlantium system
- **Avoid chemicals that are harmful to UV systems** - Avoid caustic soda and other corrosive chemicals that can degrade gaskets and o-rings
- **Prevent Water Hammer** - Water hammer can cause damage to any hydraulic system, including the Atlantium unit. Take steps to ensure that this phenomenon does not occur in your facility's water line. To prevent water hammer, consult your system engineer and check you facility system procedures for following:
  - Avoid filling empty lines with water without keeping valves open for releasing the air from the pipes and the system.
  - Avoid rapid closure of water lines by sudden closure of valves.
  - Before introducing the water, ensure that all pumps that impact the Atlantium system employ soft start-up procedures.
- **Avoid vibrations on upstream and downstream piping** - Make sure that the piping to be attached to the Atlantium Unit is reinforced to protect the Unit against vibration.
  - A high vibration level can cause damage to any hydraulic system, including the Atlantium unit.
  - High vibration can be caused by an unbalanced pump or by sudden valve close.

10.2 Basic Operational Tasks

- Shutting down the Atlantium system - See below
- Starting up the Atlantium system - See page **10-2**
- Viewing system status - See page **10-3**
- Viewing Recent Events in **TRACS** - See page **10-4**
- Taking microbial samples - See page **10-6**
- Cleaning System (if included) - See page **10-6**

10.2.1 Shutting Down the Atlantium System

In a non-emergency situation, you can shut down the Atlantium system from either the **Controller** or (if included) **TRACS**. Be sure to enable the **Auto Power On** function in the **Controller** if you want the system to save your settings. (See ***Igniting the Lamps*** on page **9-1.**)

➲ To shut down the Atlantium system from the Controller:

Step 1. On the Main screen of the **Controller**, press . The password screen appears.

Step 2. Using the number keys, enter the password **2468**. and press **OK.** The Atlantium system is turned off.

➲ To shut down the Atlantium system from TRACS:

Step 1. On the Main screen of **TRACS**, press . A confirmation dialog box appears.

Step 2. Click **Yes**. The Atlantium system is turned off.

Step 3. Using the viewport on the Atlantium Unit, check that the lamps are indeed turned off.

Step 4. Check the main screen of the **Controller** or of TRACS and verify that the system parameter for **Power** is **0%**.

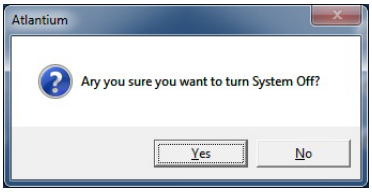

Figure 10-1: TRACS System Shutdown Screen

Step 1. On the Monitor screen of **TRACS**, press . A message appears asking you to confirm shutting down the syste.m.

Step 2. Press **OK**. The system is shut down.

Step 3. Check the main screen of the **Controller** or of TRACS and verify that the system parameter for **Power** is **0%**.

10.2.1.1 Shutting Down TRACS

For systems with **TRACS**, if you shut down **TRACS** for PC maintenance or other reasons while the system is operating, no system data (volume, events, etc.) is recorded or stored in the database that feeds the reporting functions. If communication has been disrupted, it is important to check volume and operation counters for anomalies in totals. The basic configuration and settings are preserved for the system restart.

If both the Atlantium unit and **TRACS** are shut down as a result of a power failure, check **TRACS** and restart manually as part of the Unit startup process. Configuration and settings are saved from before the power failure and are implemented upon restart.

➲ To shut down TRACS:

Step 1. From the **TRACS** Monitor screen, click the **Management** tab. The Management screen appears.

Step 2. In the upper-right, click . A confirmation dialog box appears.

Step 3. Click **Yes**. **TRACS** closes.

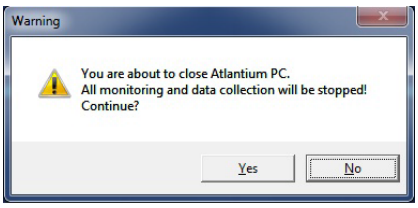

Figure 10-2: TRACS Shutdown Screen

10.2.2 Starting up the Atlantium System

You can start up the Unit via the **Controller** or, if included, via the **TRACS** **Monitor** screen and then check the water and system parameters.

➲ To start up the Atlantium system:

Step 4. Check that the power cable of the Ballast Modules is connected to the main power source.Connect the power cable of the Controller to the main power source.

Step 5. On the Main screen of the **Controller**, press ⏻

Step 6. Wait 10 minutes for lamps to turn on and the system to stabilize.

Step 7. Open the viewport and check that there are no air bubbles in the water flow. If necessary, release all air bubbles from within the system.

Step 8. Check the main screen of the **Controller** or of the **TRACS** application (if included) and verify that the Atlantium system parameters for **Power**, **Flow**, and **UVT** are within wanted acceptable range (see the table below to enter your expected values). Notify the executive maintenance engineer in case the values are out of range.

Table 10-1: Abbreviation of Table in **Appendix C**. ***Checking the System Parameters***

	Parameter	Expected Value	
		Minimum	Maximum
1	Power		
2	Flow Rate		
3	UVT		
4	UV Dose		
5	Lamp Status		

For periodic checks on Atlantium system parameters, a convenient check list is supplied in **Appendix C**, ***Checking the System Parameters*** .

10.3 Viewing System Status

You can view the real-time status of various System parameters.

➲ To view the system's status:

Step 1. On right side of the **Controller** screen, press ▶. The System Status screen appears displaying the real-time status of the following parameters:

- **UVT %**
- **Flow**
- **Power %**
- **Per Lamp: Power**, **Status**, and **Age**
- **Temperature**

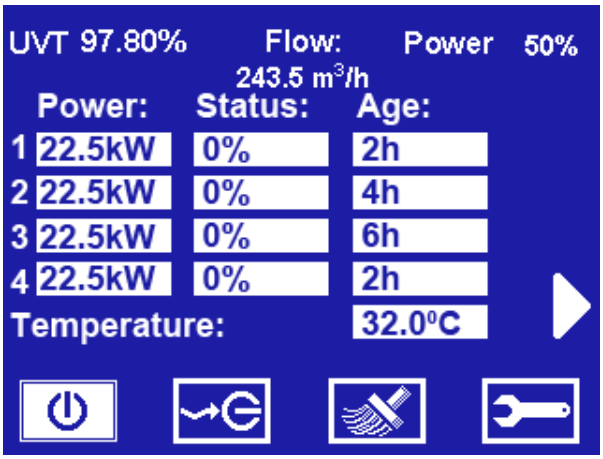

Figure 10-3: Controller Status Screen

10.4 Viewing Recent Events

Every defined event is written to the event log of **TRACS** (if included). You can view the data log of all events in the **Events** tab of **TRACS**.

➲ and **TRACS** (if included) and all of them in the **Events** tab of **TRACS**

To view the TRACS Event log:

Step 1. For systems with **TRACS**, click the **Events** tab. The Events screen appears displaying information about the most recent events in the following columns:

- **In**dex - System-generated code
- **Type** - the type of event
- **Date** - date stamp of the event
- **Time** - time stamp of the event
- **Description** - a short remark describing the event
- **Unit No.** - which Atlantium unit had this event

Figure 10-4: TRACS Events Screen

Step 2. To view additional information about the event, click an event **(1)**. The event turns white.and in the box under the list of events **(2)**, additional details are displayed.

10.5 Taking Microbial Samples

The designated aseptic sampling valves (i.e., EGMO ESV valves) are the **Inlet** and **Outlet Sampling Points** located on the sides of the Atlantium Unit. Before taking a microbial sample, a valve is sterilized internally with Ethanol 70%, as well as with flame.

Required Equipment

- Sampling containers that are clean, laboratory-grade, sampling bottles with a volume no less than 100ml (3.38oz).
- Ethanol 100-70%
- Bunsen Burner and lighter
- Permanent marker
- Sterile gloves
- Proper Sampler attire according to local laboratory protocol

- Use gloves during sampling and treat them with Ethanol 70%.
- Use **sterile disposable** sampling containers.
- Prevent contact between the sampling containers and the valves' surfaces.
- Be sure that no foreign matter or liquids fall into the sampling containers.
- Perform the sample collection as fast as possible to minimize environmental contamination of the sample.
- **Use open flame to treat the surrounding air while sampling.**

➲ To take a microbial sampling:

Step 1. Open the Sampling valve and allow water to flow for 2-3 minutes. Then close the valve.

Step 2. If the sampling valve contains a cover at the top, open its cover and place it in a clean place.

Step 3. Spray all over the Sampling valve and inside it thoroughly with Ethanol 70%.

Step 4. Using a Bunsen burner, apply the flame comprehensively over the entire Sampling valve surface from its connection to the main pipe to its spout.

Step 5. Spray the cap thoroughly with Ethanol 70% and place it on the Sampling valve.

Step 6. Open the valve and allow the water to flow for 2 minutes. If you have applied the flame properly, vapor emerges from the spout. (If there is no vapor, application of the flame was insufficient. Repeat the previous step.)

Figure 10-5: Cleaning the Sampling Valve with Ethanol

Make sure never to touch the opening at the Sampling container's neck.
While the Sampling container is open, do not turn the cap upside down.

Step 7. On the Sampling container, with one hand, remove its cap carefully, avoiding touching the inside of the cap with fingers or any other object. **Do not turn the cap upside down.**

Step 8. With your other hand position the Sampling valve under the water stream and take a water sample. Make sure never to touch the valve's opening or the opening at the container's neck. Fill the sampling container, leaving ample air space in bottle (at least 2.5 cm).

Step 9. Carefully replace the container's cap and tighten it to avoid cross contamination.

Figure 10-6: Taking a Sample

Step 10. Labeled the Sampling container with the following data:

- Sampling site
- Sampling point
- Sampler name
- Date the sample is taken

Step 11. Close the Sampling valve.

Step 12. Spray the sampling container thoroughly with Ethanol 70%.

Step 13. Store the water samples in a dark, refrigeration unit at a temperature of 2-8oC (35.6-46.4oF) until they are examined.

10.5.1 Microbial Analysis Guidelines

The microbial analysis is to be conducted according to the company guidelines which are used in the local microbiology laboratory.

- Atlantium's recommendation is to use the microbial filtration method for the testing.
- If a number of consecutive anomalous microbiological results are obtained in one of the sampling points, take the samples only after performing CIP with a disinfection chemical (peracetic acid is recommended). It is important to let the chemicals clean and sanitize the aseptic valves, as well by letting the cleaning solution flow through them. See ***Cleaning In Place (CIP)*** on page **11-2.**
- In the event that system outlet counts are higher than the inlet counts, the results are to be considered as a sampling error.
- In the event that the microbial counts are not proportional in different dilutions, the results are to be considered as a laboratory error.
- For further guidance regarding microbial sampling and analysis, contact the Atlantium Application department.

10.6 Backing up the TRACS Database

The maximum size of the **TRACS** database is 4 GB. This mean that after 4 GB of data, the system does not check if the database is saving correctly which could mean a data loss. Therefore, it is imperative to backup the databases on a monthly basis (typically 250 MB). Every first day of the month, you should back up the database of the previous month. Working with a light database, **TRACS** also works faster and more efficiently, generating reports faster.

The database in itself is not accessible due to its WORM (Write Once Read Many) infrastructure. You can create a backup file that can be used to generate the same reports as from the original database using a **TRACS Viewer PC**. However, do not attempt to make another copy from the backup, as it becomes corrupt and does not produce reports.

➲ To backup the TRACS database:

Step 1. Click the **Management** tab. The Management screen appears.

Step 2. At the top left, access the **Settings** screen by clicking an arrow at either side (displays either **Controllers** or **Settings**).+

Step 3. At the bottom of the **Settings** screen, click the **Backup DB** button. A Save As dialog box appears displaying the name of the backup file that includes information about the date and time of the backup.

Step 4. Navigate to the desired location where you want to keep the backup files.

Step 5. Click **Save**. The file is saved and a message appears confirming this.

Step 6. Click **OK** to close the message box.

Figure 10-7: Management Tab, Settings Screen

10.7 Replacing the TRACS Database

Generally, you can view old data while the system is in operation on the **TRACS Viewer PC**. For the purposes of data security and to avoid accidental loss of data, replacing the database is a password-protected function and should be done only on the **TRACS Viewer PC**.

Do not use this function on the **TRACS Operating PC** to see old data while the system is operation and collecting current data. This would cause the system to store current data in an old database and make it difficult to locate, identify and use for reporting.

➲ To replace the TRACS database:

Step 7. Navigate to the desired backed-up database file you wish to restore and select it. You are prompted to confirm replacing the database.

Step 8. To confirm, click **Yes**. The database is replaced accordingly. Now you can view the old data and generate reports and graphs.

Step 1. Click the **Management** tab. The Management screen appears.

Step 2. At the top left, access the **Settings** screen by clicking an arrow at either side (displays either **Controllers** or **Settings**).

Step 3. At the bottom of the **Settings** screen, click the **Restore DB** button. A Select file dialog box appears.

Step 4. Navigate to the location of the backup files and select the desired file.

Step 5. Click **Open**. The database is restored according to the selected file and a message appears confirming this.

Step 6. Click **OK** to close the message box.

Figure 10-8: Management Tab, Settings Screen

10.8 Displaying TRACS History

You can display records of up to five items from the list of parameters to appear in a graph.

➲ To select parameters whose history is to be displayed in the graph:

Step 1. Click the **History** tab. The History screen appears.

Step 2. On the left, from the **Unit** dropdown list, select the Atlantium Unit for which the parameters' information is to be displayed.

Step 3. Under **Parameters Selection**, mark **one parameter only** on the list to be displayed in the graph. Use the scrollbar at the bottom to display additional parameters.

Figure 10-9: History Screen

The options are:

UVT (%)	Lamp 1 Status (%)	Lamp 3 Status (%)
Flow (m^3/h)	Lamp 1 UVT (%)	Lamp 3 UVT (%)
Dose (mJ/cm^2)	Lamp 1 Age (Hr)	Lamp 3 Age (Hr)
System Power (%)	Lamp 1 Power (kW)	Lamp 3 Power (kW)
Operate at (mJ/cm^2)	Lamp 1 UVIS (mA)	Lamp 3 UVIS (mA)
Maximum Dose (mJ/cm^2)	Lamp 1 UVTS (mA)	Lamp 3 UVTS (mA)
Minimum Dose (mJ/cm^2)	Lamp 1 On	Lamp 3 On
Maximum Flow (m^3/h)	Lamp 2 Status (%)	Lamp 4 Status (%)
Lamps On	Lamp 2 UVT (%)	Lamp 4 UVT (%)
Num of Lamps	Lamp 2 Age (Hr)	Lamp 4 Age (Hr)
System On/Off	Lamp 2 Power (kW)	Lamp 4 Power (kW)
Operation Mode Dose/Power	Lamp 2 UVIS (mA)	Lamp 4 UVIS (mA)
Unit Temperature (^oC)	Lamp 2 UVTS (mA)	Lamp 4 UVTS (mA)
	Lamp 2 On	Lamp 4 On

Step 4. For the graph to display the history of a particular time period, under **Date Selection**, in the **From** field, to set a starting time, type in a date or click the calendar picker icon.

Step 5. From the calendar picker, select the desired start date.

Step 6. In the adjacent field, enter the time of day from which you want the data to begin.

Step 7. In the **To** field, to set an ending time, type in a date or click the calendar picker icon.

Step 8. From the calendar picker, select the desired end date.

Step 9. In the adjacent field, enter the time of day from which you want the data to end.

Step 10. Click **Submit**. The data appears in the graph accordingly.

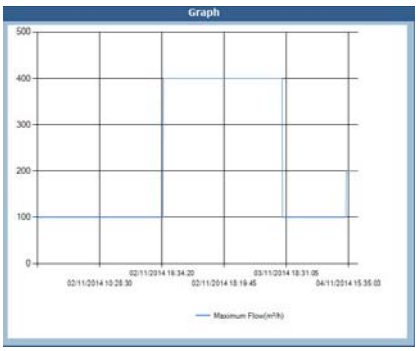

10.9 Exporting TRACS History to MS Excel Format

You can export the data collected via a specified period in the History screen to **.csv** format compatible with MS Excel format.

Step 11. On the left, from the **Unit** dropdown list, select the Atlantium Unit for which the parameters' information is to be displayed.

Step 12. Under **Parameters Selection**, mark up the parameters on the list to be displayed in the graph. Use the scrollbar at the bottom to display additional parameters.

Or, to select all parameters, click the **Select All**.

Step 13. To set the particular time period in which the data is to be included, under **Date Selection**, in the **From** field, to set a starting time, type in a date or click the calendar picker icon.

Step 14. From the calendar picker, select the desired start date.

Step 15. In the adjacent field, enter the time of day from which you want the data to begin.

Step 16. In the **To** field, to set an ending time, type in a date or click the calendar picker icon.

Step 17. From the calendar picker, select the desired end date.

Step 18. In the adjacent field, enter the time of day from which you want the data to end.

Step 19. Under the graph area, in the **Report Name** field, type in a name for the History Report file.

Step 20. At the bottom of the screen, under **Export Selected History**:

Step 21. Click the export to Excel button: . A Save as dialog box appears displaying the file name as defined in the **Report Name** field with the Excel-compatible file extension, **.csv**.

Step 22. Navigate to the location where you want to save the file.

Step 23. Click Save. The file is saved in the designated folder.

11 System Maintenance

To keep the Atlantium system in peak form, preventive and periodic routine maintenance is essential. During commissioning, Atlantium trains your local staff how to do the tasks on a prescribed schedule or as needed.

WARNING!

- Unauthorized servicing or modification of this system in a manner not specified in this manual could expose personnel to potential electrical or other hazards.
- Improper use or adjustment of this system may invalidate the service warranty agreement.

Before you begin a procedure, carefully read through it so that you can anticipate the steps efficiently.

The periodic routine maintenance schedule is:

- Weekly Maintenance Tasks:
  - Walk-Around Inspection Tour - see below
  - Checking the Ballast Module Cooling Fans (See page **11-8**)
- Yearly Maintenance Tasks:
  - Cleaning the Quartz Tube (See page **11-17**)
  - Replacing the Quartz Tube O-rings (See page **11-17**)
- Maintenance Tasks Performed as Needed:
  - Cleaning In Place (CIP) (See page **11-2**)
  - Replacing a Lamp (See page **11-9**)
  - Checking/Replacing a Sensor (See page **11-20**)
  - Tuning the Atlantium System (See page **11-24**)
  - Checking/Replacing the Quartz Tube (See page **11-17**)
  - Cleaning/Replacing a UVIS Wave Guide (See page **11-14**)
  - Cleaning/Replacing a UVIS Mirror (See page **11-16**)
  - Replacing the Temperature Sensor (See page **11-26**)
  - Replacing the Temperature Converter Card (See page **11-27**)

11.1 Walk-Around Inspection Tour

Perform Weekly

Walk-Around and inspect the Atlantium system once a month to check for water leaks, visible damage to the cables and harnesses, or any other part of the system. Report any problem you find to an authorized technician.

➲ To perform a Walk-Around inspections:

Step 1. Walk around the Atlantium unit and inspect it. Look for leakage at the incoming and outgoing pipes.

Step 2. Inspect the **Cable Harness** and cables running between the Unit and the Ballast Module(s) and Controller for signs of fraying and any other visible damage.

Step 3. Inspect the Ballast Module(s) and Controller for any signs of damage.

Step 4. Report any leakage or damage to an authorized technician immediately.

11.2 Cleaning In Place (CIP)

Performed as needed

The CIP procedure consists of two parts:

- Cleaning to remove the accumulated particles that collect on the quartz tube over time
- Disinfectant cleaning to sterilize the quartz tube (not applicable to some Municipal installations)

Clean the Atlantium Unit's inner surfaces and quartz tube generally on a monthly basis. However, if the system performance is on target and the UVT Sensor readings are stable, you can clean using this process less frequently, depending on the specific chemistry of your water.

A CIP recirculation system is available from Atlantium as an optional CIP Kit. Connect the recirculation system to the CIP ports to create a closed-loop flow line that pumps a diluted solution through the Unit.

The estimated time for the CIP process is 1.5 hours.

Prepare the following:

- Protective chemical-safe goggles, clothing and gloves
- An external pump-driven recirculation system with a built-in 100 liter reservoir (26.5 US gallons) or Atlantium's CIP Kit including its accessories (See ***CIP Ports and CIP Kits*** on page **3-16.**)
- Cleaning solution (See below)
- Disinfectant cleaning solution (not applicable to some Municipal installations) (See page **11-3**)

11.2.1 Selecting the Correct Chemicals for CIP

It is **critically important** to select the correct cleaning and disinfecting chemical for the CIP process. It must be powerful enough to clean the inner surfaces of the Atlantium unit, while at the same time:

- Does not harm the components of the Unit that it comes into contact with (stainless steel 316, quartz and Viton® o-rings).
- Does not contaminate the product for which the water being treated by the system is used.

- The chemicals selected and the concentrations used must be approved for use by the facility's quality assurance and safety officials, and must comply with the written protocols and procedures set in place by those departments.
- Use and handle in strict accordance with their manufacturer's instructions, product information sheets, and material safety data sheets (MSDS).
- It is strictly forbidden to use of NaOH (Caustic Soda) as it causes irreversible damage to the quartz. Any use of this material requires an analysis of temperatures, concentration, frequency and duration and written approval from Atlantium's application engineer.

- All chemicals must be obtained locally.
- Atlantium does not supply chemicals - get them locally from commercial chemical suppliers.

Recommended Cleaning Solutions

The following chemicals have been tested and found to be very effective for cleaning and are recommended for use when cleaning the Atlantium system:

- Phosphoric acid (H_3PO_4) 2% diluted solution
- Nitric acid (HNO_3) 2% diluted solution
- HCl 2% diluted solution - recommended for metal based (rust-colored) deposits
- Sulfamic acid (H_3NSO_3) 1.5% diluted solution - recommended for calcium based deposits

Recommended Disinfectant Solutions (not applicable to some Municipal installations)

(The Disinfectant CIP process is not applicable to some Municipal installations)

The following have been tested and found to be very effective for disinfection and are recommended for use when disinfecting the Atlantium system:

- Peracetic acid-based chemicals - 30 min. contact time, for example:
  - P-3 Oxonia Active 150 - 0.5% diluted solution according to manufacturer's recommendation
  - Divosan Forte - 0.5% diluted solution according to manufacturer's recommendation
- Hot water at 85°C (185°F) for 30 min.

The use of any other cleaning and disinfection chemicals requires Atlantium's approval.

DO NOT use caustic soda in the Atlantium system. If your facility uses caustic soda in a CIP process, use a by-pass line to prevent caustic soda contact with the Atlantium unit.

11.2.2 Preparing the Chemical Solution

For both cleaning and disinfecting, the liquid in the reservoir must contain the desired percentage of the chemical additive (see above). Therefore, the purchased chemical solution must be diluted and added to the reservoir. Calculate the correct amount of chemical solution to be used for the CIP process.

- The concentrations refer to room temperature.
- The diluted solution values denote the required dilution of the chemical circulating through the Atlantium Unit.
- While calculating the diluted volumes, consider all volumes including the Unit, pipes and the recirculation tank.*

➲ To calculate the correct amount of chemical solution:

Step 1. Calculate the total volume you need for the CIP* by adding the water volumes in:

- The Atlantium unit volume (measurements in liters/gallons) - Refer to the ***Physical Specifications*** Table in ***Atlantium System Footprint*** on page **2-3**
- The pipes between the Atlantium Unit and the **Inlet** and **Outlet Valves**
- The CIP recirculation system
- The hoses between the Unit and the recirculation system

Step 2. Calculate the amount of chemical additive to be added to the reservoir to achieve the desired dilution. Use this formula:

$$C = \frac{A * V_t}{B}$$

A - The target concentration for the liquid (chemical substance + water) in %
B - The concentration of the chemical substance to be added in %
C - Volume of the chemical substance to be added in liters/gallons
V_t - Volume of the water in the Unit + piping + CIP Reservoir (as described above*) in liters

* If you intend to collect the solution into the CIP reservoir or other container, the total volume of the cleaning solution must not exceed the volume of the CIP reservoir or container.

11.2.3 Performing CIP

The CIP process is performed utilizing fresh water. For systems with sea water, drain the system and rinse before preforming CIP.

This section details the CIP process with recommended steps for carrying it out. The procedure is to be adapted according to the specific circumstances of your installation.

The CIP process is to follow these major steps:

Step 1. Shutdown the Atlantium system
Step 2. Close the inlet and outlet valves
Step 3. For systems with sea water, drain the system
Step 4. Remove the caps covering the CIP ports
Step 5. Connect the supply hose to the bottom CIP port and connect the return hose to the top CIP port
Step 6. Fill the CIP reservoir with fresh water
Step 7. Starting the circulation
Step 8. Adding the chemical solution
Step 9. Running the CIP circulation
Step 10. Draining the system and CIP cart
Step 11. Rinsing the system and the CIP cart
Step 12. Performing CIP Disinfection
Step 13. Ending CIP and draining the system
Step 14. Refilling the system
Step 15. Returning power to the lamps

The CIP diagram below is followed by the full recommend CIP procedure.

CIP Setup

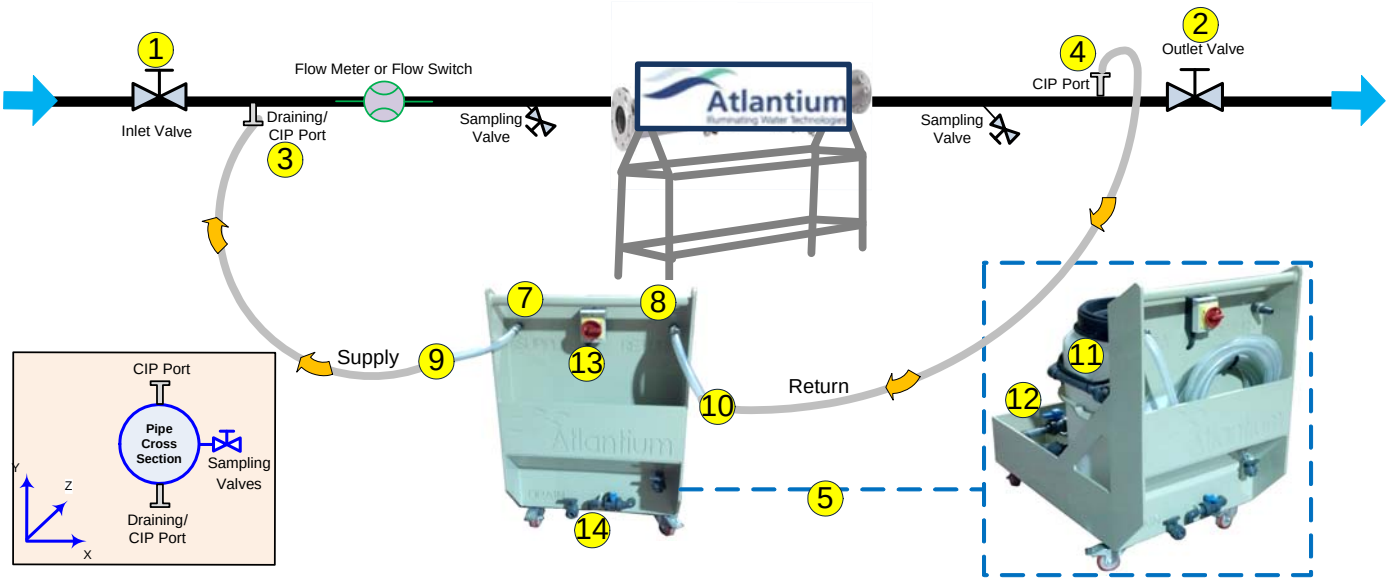

Figure 11-1: Recommended CIP Setup

If the installation is vertical, the water flow is from bottom to top. The Draining/CIP port **(3)** is on the bottom, under the Atlantium Unit and the CIP port **(4)** is above the Atlantium Unit.

To Perform CIP:

Shutting Down the System

Step 1. Shut down the Atlantium system, on the **Controller**, by pressing the **Main ON/OFF Operation** button in the upper-right corner.

Step 2. On the Connection Box next to each lamp, turn the switch to the **Off** position.

Step 3. Close the Unit's inlet isolating valve **(1)** and outlet isolating valve **(2)**.

Step 4. Remove the caps **(D)** covering the bottom and top CIP ports **(3 & 4)**. Place the caps in a safe place for reuse later. Verify that the gasket **(B)** is still inserted into the ferrule.

Step 5. For systems with sea water, drain the system. You can use the bottom CIP/Draining port for this purpose.

Make sure that the hose fittings are secure and tight.
Water must fill the entire path through the piping on both sides of the Atlantium Unit and the Unit itself, as well as the Supply and Return hoses and the CIP Kit's reservoir.

Connecting the CIP Hoses

Step 6. Remove the hoses from their pocket on the Cart.

Step 7. Using the CIP cap's clamp **(A)**, connect the CIP Kit's Supply hose **(9)** to the bottom CIP port **(3)**. Verify that the gasket **(B)** is present.

Step 8. Connect the CIP Kit's Return hose **(10)** to the top CIP port **(4)**. Verify that the gasket **(B)** is present.

Figure 11-2: The clamp is closed

Figure 11-3: The clamp is opened around the CIP port /gasket /cap

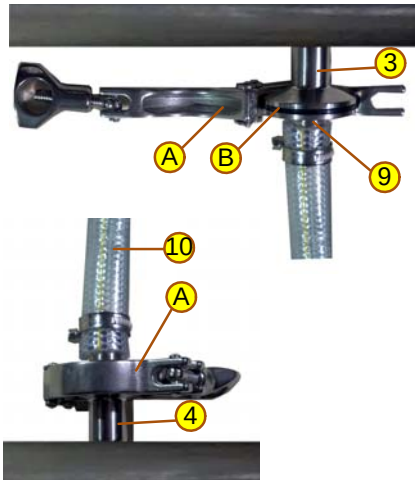

Hose connection to Bottom and Top CIP Ports

Filling the CIP Reservoir

Step 9. To fill the CIP reservoir **(A)** with water:

- **Filling option 1:**
  - Slightly open the Unit's inlet isolating valve **(1)** and open the top CIP port on the outlet side **(4)** and allow the facility's water to fill the CIP Kit's reservoir **(11)**.
  - There is a full line indicator on the reservoir **(11)**. Make sure the water in the reservoir is up to the 100 liter (26.5 US gallons) level.
    - Close the Unit's inlet isolating valve **(1)**.
    - If the CIP port **(4)** is a valve, close it.
- **Filling option 2:**
  - Open the top cover of the CIP Kit's reservoir **(11).**
  - Using a hose of an external water source, fill the reservoir with 100 liter reservoir (26.5 US gallons of room-temperature tap water (±25°C/75°F).
  - There is a full line indicator of the reservoir. Make sure the water in the CIP Kit's reservoir **(11)** is at the 100 liter reservoir (26.5 US gallons level.
  - Close cover.

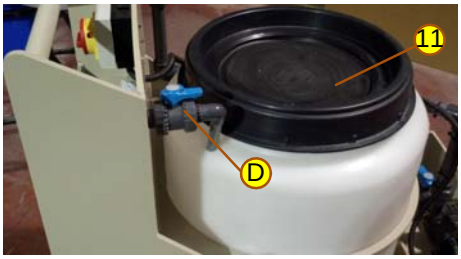

Figure 11-4: CIP Kit's Reservoir

Figure 11-5: CIP Cart's Inlet and Drain Port

Starting the CIP Circulation Process

Step 10. If the bottom and top CIP ports **(3 & 4)** are valves, open them.

Step 11. To start the CIP recirculation pump, on the CIP cart, turn the switch **(13)** to the **On** position and allow the solution to circulate through the Unit for **the period of time specified in the chemical's Use instructions, but not less than 30 minutes**.

Step 12. Verify that the Atlantium Unit is full of water and that the water is circulating correctly.

Adding the Chemical Solution

Protect yourself from the ill-effects of chemicals with protective chemical-safe goggles, clothing and gloves.

Step 13. Turn the switch **(13)** to the **Off** position and open the top cover of the CIP Kit's reservoir **(11)** and add the prepared chemical solution to the water in the reservoir. (See ***Selecting the Correct Chemicals for CIP*** on page **11-2.**)

Step 14. To start the circulation again, turn the switch **(13)** to the **On** position.

Step 15. **When performing the CIP process for disinfecting,** as the solution is circulating through the Unit, open the sampling valves and let the water through it to make sure they also get full of CIP chemical solution.

Step 16. After the chemical solution has circulated through the Unit for a sufficient duration, it must be drained from the system.

- **If local regulations permit, and a physical drain setup exists**, drain the chemical solution to the facility's sewage system:
  - **a** Close the inlet bottom CIP port **(3).**
  - **b** To stop the CIP recirculation, on the CIP cart, turn the switch **(13)** to the **Off** position.
  - **c** Open the CIP cart's drain valve **(C)**. The water with the chemical solution begins to drain out.
  - **d** Connect the CIP cart's drain valve **(C)** to the facility's sewage system.

Or,

- **According to local regulations, use the Draining/CIP port to drain the solution in the system into a external container.**

Or,

- **Use the CIP reservoir (11) to collect the chemical solution**.
  - **a** Close the inlet bottom CIP port **(3).**
  - **b** To stop the CIP recirculation pump, on the CIP cart, turn the switch **(13)** to the **Off** position.
  - **c** Allow the chemical solution to drain entirely into the CIP reservoir **(11)**.
  - **d** Dispose of the contents according to regulations. Connect a drain pipe to the CIP cart's drain pipe and open the CIP cart's drain valve **(C)**. The water with the chemical solution begins to drain out.
  - **e** Disconnect and close the CIP cart's drain valve **(C)**.

Rinsing the System and CIP Kit

Step 17. To rinse the Atlantium system thoroughly, slightly open the inlet valve **(1)**.

Step 18. Open the CIP cart's drain valve **(C)** and completely drain the CIP reservoir **(11)**.

Step 19. Using an external water source, rinse the CIP cart's reservoir, letting the rinse water drain out of the CIP cart's drain valve **(C)**.

Step 20. Open the Inlet valve **(1)** and refill the Atlantium Unit with water. When full, close the Inlet valve **(1)**.

Step 21. Refill the reservoir (see **Step 9.** above.)

Step 22. To start the circulation again, turn the switch **(13)** to the **On** position.

Step 23. Let the rinse water circulate a few times.

Step 24. Drain the system again according to **Step 16.** above.

Step 25. To assure that all of the chemicals are flushed out of the system, draw some water from the Sampling valve and test it using an appropriate indicator for the chemical used, such as measuring the pH, consult you chemical supplier).

Step 26. Close the CIP cart's drain valve **(C)**.

Performing CIP Disinfection

Step 27. If you are planning to perform an additional CIP process using the disinfectant solution, refer to ***Preparing the Chemical Solution*** on page **11-3** and follow the CIP process again from ***Filling the CIP Reservoir*** and **Step 9.** above.

Or,

- To return to normal operating status, proceed to the next step.

Ending CIP and Draining the System

Step 28. Detach the Supply and Return hoses from the CIP ports **(3** and **4)** and clamp **(A)** them closed with their caps **(D)**.

Step 29. Open the isolating outlet valve **(2)**.

Step 30. To avoid hammer effect if there is air trapped in the system, carefully open the inlet valve **(1)** completely and resume normal operation.

Step 31. To drain out any water inadvertently collected in the CIP cart's storage pocket or base, use the CIP cart's drain valves **(A** and **B)**.

Step 32. Roll up the CIP Kit's hoses and return them to their storage pocket **(F)**.

Refilling the System

Make sure that the Atlantium Unit is filled with water before powering it up and turning on the lamps.

Step 33. Turn on the Atlantium system at 100% power and wait until the system has stabilized and indicates that it is ready.

Returning Power to the Lamps

Step 34. On the Connection Box next to each lamp, turn the switch to the **On** position.

Step 35. Turn on the Atlantium system, on the **Controller**, by pressing the **Main ON/OFF Operation** button in the upper-right corner.

11.3 Checking the Cooling Fans

Perform Monthly

Once a month the cooling fans of the Ballast Modules must be checked to verify that the air is flowing out.

➲ To check the cooling fans:

- Check that air is being blown out of the fan on top of the Ballast Module.

11.4 Replacing a Lamp

Performed as needed

The UV lamp can be used as long as it provides the required dose and efficient service. (Generally, a lamp service status of 80% or more is considered efficient service.) A lamp should be replaced ONLY when necessary.

Each lamp's performance is measured directly by a dedicated UV Intensity Sensor. Replace a lamp when:

- Its status or performance declines and the lamp no longer provides the required performance at the appropriate electrical cost
- Once its rated hours expire, be alert to any changes in efficiency that could indicate the need to change the lamp

In the **Controller** and **TRAC** Software tracking application (if included),you can set a margin to assure notification as status declines and a warning is sent to the operator at both the user setting level and the internally coded minimum.

For systems with multiple lamps, the system may continue to operate while any one of the lamps is being replaced, however, precautions must be carried out to protect you from the UV.

- Allow the old lamp at least 10 minutes to cool down before starting.
- Read carefully the instructions provided in the new Lamp's package.
- Wear white cotton gloves.
- Before installing a new lamp, verify that it is clean and free of grease.
  If not, rub it gently with the provided lens tissue. Never touch the lamp with your bare hands - hold it only by the end-connectors. Oily residues from fingerprints can damage the lamp.
- Pay strict attention to the safety warnings and precautions in the ***Safety Overview*** on page **4-1**.
- In case of lamp breakage, refer to the Safety instructions in ***Safety Overview*** on page **4-1**.

Lamp Replacement Options

- Replacing a Lamp after System Shutdown
- Replacing a Lamp while System is Operating

Generally, a lamp is replaced after shutting down the entire Atlantium system. However, in a facility where there is no redundance UV purification, and you require minimizing system downtime, you can replace a lamp while other lamps continue operation provided you follow these safety requirements:

Replacing a Lamp after System Shutdown

Prepare the following:

- Replacement lamp
- Lamp cleaning cloth (comes with the lamp)
- White cotton gloves
- #3 Allen wrench
- #4 Allen wrench
- Caution signs

Step 1. To shut down the entire system:

Step 1. On the Main screen of the **Controller**, press ⏻.

Step 2. Enter the password (the default password is **2468**). The Atlantium system is turned off.

Step 3. Using the viewport on the Atlantium Unit, check that the lamps are indeed turned off.

Step 4. Check the main screen of the **Controller** and verify that the system parameter for **Power** is **0%**.

A severe danger of electrocution exists if the lamp is not turned off during replacement. Be absolutely sure you have turned off the correct lamp before you proceed to replace the lamp.

Step 5. Continue with the procedure, ***To replace a lamp*** below.

Replacing a Lamp while System is Operating

If you are replacing a lamp while other lamps are still in operations, follow these safety requirements:

- Shutdown the electricity supplied to the lamp to be replaced.
- **During the time when the lamp's caps are removed, use Caution floor signs at a distance of 1m/40inch from the Atlantium Unit that warn passersby against possible UV light exposure and not to approach without proper eye and skin protection.**
- Wear white cotton gloves.
- Wear long sleeves rolled down to your wrist.
- Where appropriate eye protection, such as containing polycarbonate lens that meet EN166, CAN/CSA-Z94.3-02 and/or Z87.1 standards. The UV lamps are designed with high internal positive pressure.
- **Do not look directly into the lamp enclosure or into any openings that emit UV light during the entire lamp replacement procedure.**

Prepare the following:

- Replacement lamp
- Lamp cleaning cloth (comes with the lamp)
- White cotton gloves
- Eye protection
- Long sleeved clothing
- #3 Allen wrench
- #4 Allen wrench
- Caution signs

To shut down electricity to a single lamp:

Step 1. Deactivate the lamp to be replaced:

a To access the **Controller's** Settings screen, from the **Main Operations** screen, press . The **Password** screen appears.

b Using the numbered keys, enter the password (default password is **1357**) and press . The Settings screen appears.

c For **Lamps**, press ▶. The Lamps Settings screen appears.

d To disable a lamp, press its **Enable** box to remove the checkmark.

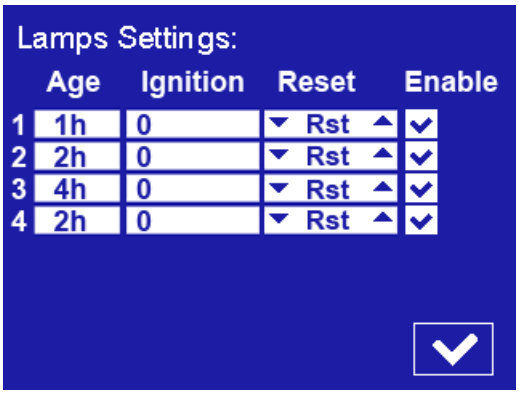

Figure 11-6: LampSetting Screen

- A severe danger of electrocution exists if the lamp is not turned off during replacement. Be absolutely sure you have turned off the correct lamp before you proceed to replace the lamp.

Step 2. Continue with the procedure, ***To replace a lamp***, below.

To replace a lamp:

Step 1. Allow the old lamp at least 10 minutes to cool down before starting.

While carrying the steps of this procedure, check that the O-rings on the components, such as the lamp housings and holders, are not damaged. If damaged, replace them before refastening the component in place.

Accessing the Lamp

For systems that contain wave guides, **be sure to access the lamp from the side that contains the sensors**. The wave guide is fragile and may be damaged easily if the lamp is inserted from the opposite site.

Step 2. Using a #3 Allen wrench, remove the four Allen screws **(1)** that secure the lamp's connector assembly **(2)** and remove the connector assembly. Each screw has a washer.

Step 3. **To prevent any damage to the lamp**, make sure you pull the lamp's connector assembly straight out and not at an angle.

Step 4. Using a #4 Allen wrench, remove the 4 screws **(3)** of the lamp's housing **(4)**. Each screw has a washer.

Step 5. Grasp the lamp's housing and rotate it clockwise and counterclockwise until it loosens. **Make sure the housing is not tilted against the quartz tube while rotating it**.

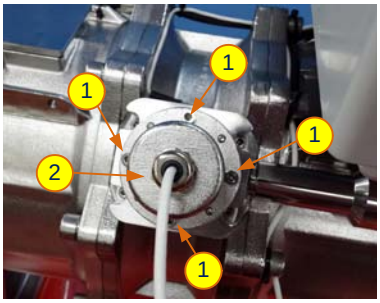

Figure 11-7: Lamp Replacement (Generic View 1)

(The O-Ring on the sleeve stopper between the holder and the stopper may cause the two parts to stick due to the heat. The slight rotation releases it).

To prevent any damage to the lamp and quartz tube, make sure you pull the lamp's housing straight out and not at an angle.

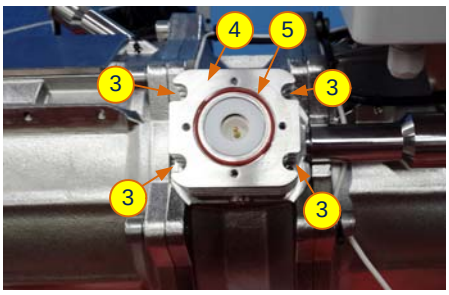

Figure 11-8: Lamp Replacement (Generic View 2)

Removing the Faulty Lamp

The lamp is hot! DO NOT touch the lamp with bare hands, particularly the quartz portion.
Wait at least ten minutes until the lamp has cooled down or use an appropriate pair of long-nose pliers to carefully pull out the lamp.

Step 6. Wearing appropriate cotton gloves and skin covering, and using a suitable long-nose pliers, pull the lamp straight out of the quartz tube in the Unit and set it aside on a stable surface.

Step 7. Check the inner surface of the quartz tube for residual moisture or high humidity. If any visible moisture exists, using a lens cleaning cloth, dry it.

For Systems with Wave Guide

Every time the lamp is replaced, the wave guide must be cleaned or, if needed, replaced. See ***Cleaning/Replacing the UV Intensity Wave Guide*** on page **11-14.**

Figure 11-9: Lamp Replacement (Generic View 3)

For Systems with UVIS Mirror

Step 8. Verify that the internal sensor's mirror is clean.See ***Cleaning/Replacing the UV Intensity Sensor's Mirror*** on page **11-16.**

Installing the Replacement Lamp

Step 9. Unpack the new UV lamp from its vacuumed sealed package.

Step 10. Make a note of the serial number of the new lamp.

Step 11. Clean the new lamp using the cleaning pad provided with the lamp. Verify that no visible fingerprint or dust is on the lamp.

Step 12. Insert the new lamp into the quartz tube in the Unit, all the way until it stops. Ensure that the male contact point **(6)** on the end of the lamp has meshed with the female contact point in the lamp's housing on the other side of the Unit.

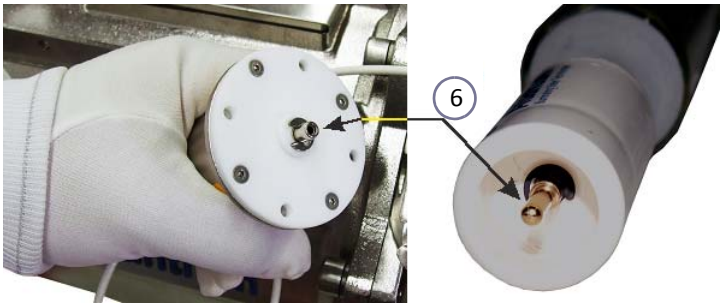

Figure 11-10: Lamp Replacement (Generic View 4)

Assembly

Step 13. Check that the lamp housing's O-ring is in place, clean, dry and undamaged. Replace if necessary.

Step 14. Insert the lamp's housing that you removed in above. Ensure that the male contact point on the end of the lamp has meshed with the female contact point in the lamp's housing on the other side of the Unit.

Step 15. Replace the lamp's housing and, using the # 4 Allen wrench, fasten the four Allen screws with their washers to secure it to the Unit.

Step 16. Replace the lamp's connector assembly pushing it straight in and using the # 4 Allen wrench, fasten the four Allen screws with their washers to secure it to the Unit.

Placing Temporary Caution Signs

Step 17. **Place Caution floor signs at a distance of 1m/40inch from the Atlantium Unit that warn passersby against possible UV light exposure and not to approach without proper eye and skin protection.**

Step 18. Unscrew and remove the two caps **(7)** on each side of the lamp. (See the figure to the right.)

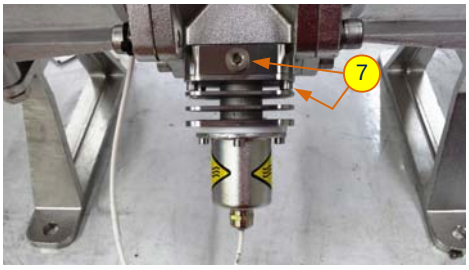

Figure 11-11: Lamp's Caps (Generic View 5)

Reactivating the Lamp

The newly replaced lamp must be tested to verify that it is in working order.

Reactivation the Lamp

Step 19. To Activate the new lamp from the **Controller**:

Step 20. For the lamp that is replaced, on the connection box, turn the lamp switch to the **On** position. Check that the lamp ignites properly.

Step 21. Return to the **Controller's** Lamps Settings screen and activate the replaced lamp by using the ▲▼ arrows, set the desired lamp to **ENB**.

Step 22. To reset the lamps' usage clock, press .

Step 23. Press . The settings are saved and you are returned to the Settings screen.

Step 24. Operate the system without the lamp's caps for one hour.

Step 25. Return the lamp's caps **(5)** and remove the Caution floor signs.

Step 26. Perform system tuning according the instructions on page **11-23**.

Registering the Lamp's Serial Number in TRACS

Step 27. For systems with **TRACS**, to register a new lamp's serial number:

- **a** On the top of the **TRAC Software's** **Management** screen, use the ◀/▶ buttons, access the **Maintenance Registry** and select **Lamps.**
- **b** Click **New/Replacement**. The Replacement Lamp section appears in the lower left corner.
- **c** For **New Serial #**, enter the new lamp's serial number. It is on both the wrapping and the lamp itself.
- **d** For **UV Unit**, select the correct Unit number from the list.
- **e** For **Lamp Number**, select the correct lamp position.
- **f** For **Operator**, enter your name (for tracking purposes, the name of the person who is replacing the lamp).
- **g** Click Done. The lamp usage hours are automatically reset.

Recording Lamp's Serial Number

Step 28. Gather the following information about the old lamp you replaced:

- lamp's serial number
- system model
- the number of hours on the lamp usage clock when you changed the lamp
- the number of ignitions of the lamp
- the status of the lamp when you changed it

Step 29. Email this information to:support@atlantium.com.

Observing Lamp Efficiency

Step 30. Observe the system's efficiency for **100 hours**. If after this period there is a performance degradation of more than 5%, remove the UV intensity sensor and check for humidity. Clean if necessary.

Step 31. Perform **System Tuning** according the instructions on page **11-24**.

11.5 Cleaning / Replacing the UV Intensity Wave Guide

If your system includes wave guides:

For each UVIS sensor in the Atlantium Unit, there is an internal wave guide for directing UV light into the sensor. The UV Intensity Sensor's wave guide must be cleaned every time the lamps are replaced.

Prepare the following:

- Replacement UV Intensity Sensor's Wave Guide
- Wave Guide tool
- White cotton gloves
- Alcohol/isopropanol and lint-free lens cleaning paper
- Appropriate Phillips screwdrivers

- Allow the old lamp at least 10 minutes to cool down before starting.

- Be very careful when handling the wave guide. The wave guide is made of quartz and is fragile and easily broken.

➲ To clean / replace the wave guide:

Accessing the Wave Guide to be Replaced

Step 1. On the side of the Unit where the UVIS sensors are located, identify the lamp whose wave guide is to be cleaned/ replaced.

Step 2. Follow the directions for removing a lamp. See ***Replacing a Lamp*** on page **11-9.**

Removing the Wave Guide

Step 3. Screw the Wave Guide tool **(L)** onto the wave guide socket **(J)**.

Figure 11-12: Wave Guide Tool

Step 4. While holding the Wave Guide tool **(L)** now attached to the wave guide **(G)**, using an appropriate Phillips screwdriver, **(M)** unfasten each of the screws **(K)**.

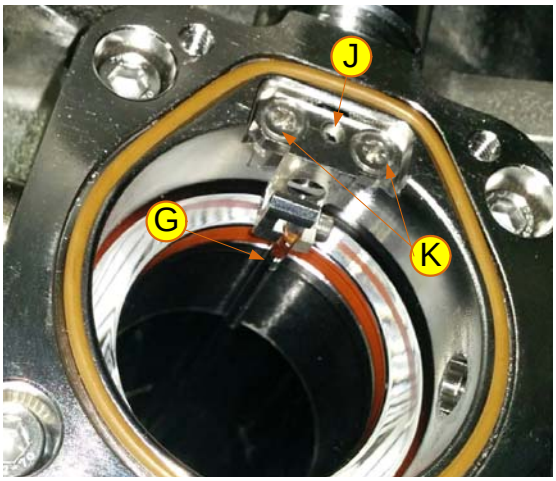

Figure 11-13: Wave Guide Elements (Generic View)

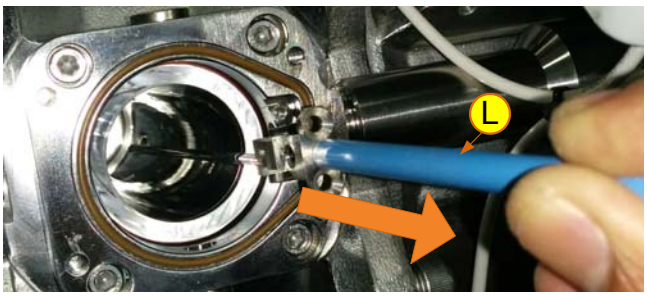

Figure 11-14: Removing the Wave Guide (Generic View)

Step 5. With the Wave Guide tool **(L)**, carefully pull out the wave guide.

Step 6. Unscrew the Wave Guide tool **(L)** and detach it from the wave guide **(G)**.

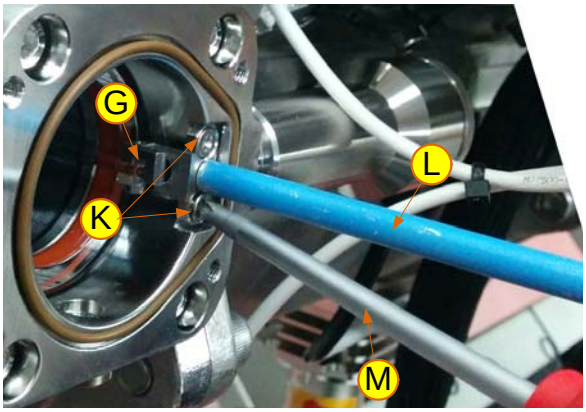

Figure 11-15: Unfastening the Wave Guide (Generic View)

Figure 11-16: Wave Guide Tool and Wave Guide

Cleaning the Wave Guide

Step 7. While wearing white cotton gloves, carefully clean the wave guide with isopropanol and lint-free lens cleaning paper.

Step 8. Ensure that the wave guide is completely dry before returning it to its place.

Step 9. Examine the wave guide for marks and damage. Fingerprints or other stains may cause erroneous UV intensity sensor readings. If the wave guide's surface is damaged, it must be replaced.

Preparing the Replacement Wave Guide

Step 10. Screw the Wave Guide tool **(L)** onto the wave guide socket **(J)**.

Step 11. With the Wave Guide tool **(L)**, carefully insert the wave guide in place.

Step 12. While holding the Wave Guide tool **(L)** now attached to the wave guide **(G)**, using an appropriate Phillips screwdriver, **(M)** fasten each of the screws **(K)**.

Step 13. Check that the wave guide is parallel to the side of the quartz tube and not pointing at an angle. If it is at an angle, the quarts tube is not installed straight. Remove the wave guide and remove and reinstall the quartz tube following the directions in ***Cleaning/Replacing a Lamp's Quartz Tube and O-rings*** on page **11-17**. When complete, install the wave guide again.

The correct position of the wave guide is parallel to the side of the quartz tube and a distance of 0.75mm from the quartz tube.

Step 14. Follow the directions to reinsert the lamp and refasten the lamp's housing and connector See ***Replacing a Lamp*** on page **11-9.**

11.6 Cleaning / Replacing the UV Intensity Sensor's Mirror

Performed as needed

If your system includes UVIS mirrors:

For each lamp in the Atlantium Unit, there is a small internal mirror **(A)** for directing UV light into the sensor. The UV Intensity Sensor's Mirror must be cleaned every time the lamps are replaced.

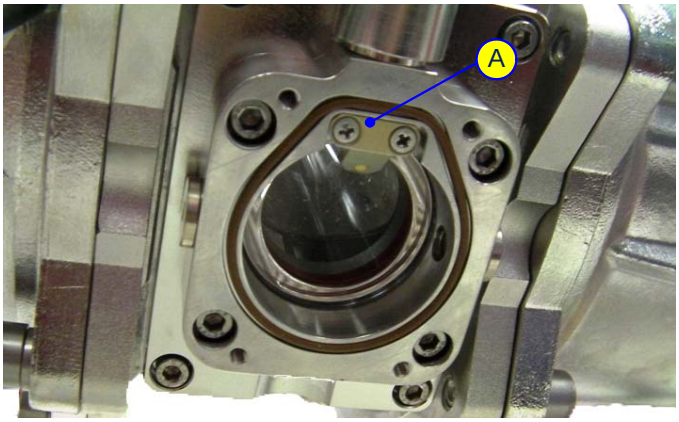

Figure 11-17: Generic Cleaning the UV Intensity Sensor's Mirror (Generic View)

Prepare the following:

- Replacement UV Intensity Sensor's Mirror
- Isopropanol and lint-free lens cleaning paper
- Small Phillips screwdriver

While carrying the steps of this procedure, check that the O-rings on the components, such as the lamp housings and holders, are not damaged. If damaged, replace them before refastening the component in place.

➲ To clean the mirror:

Step 1. No particular parts need be removed from the Unit in order to access the mirror for cleaning, once the lamp has been removed. See page **11-9** for instructions on replacing the lamp.

Step 2. Clean the reflective side of the mirror – the side facing into the Unit – with isopropanol and lint-free lens cleaning paper.

Step 3. Ensure that the mirror is completely dry before re-assembling the UV lamp.

Step 4. Examine the mirror's surface after cleaning and before you close the UV lamp' housing. Fingerprints or other stains may cause erroneous UV intensity sensor readings. If the mirror's surface is damaged, it must be replaced.

➲ To replace the mirror:

Step 1. Once the lamp has been removed, you can replace a damaged mirror. See page **11-9** for instructions on replacing the lamp.

Step 2. Using a small Phillips screwdriver, remove the two screws holding the mirror in place and remove the mirror.

Step 3. Clean the reflective side of the replacement mirror with isopropanol and lint-free lens cleaning paper.

Step 4. Examine the mirror's surface after cleaning and before you install it to make sure it is damage-free.

Step 5. Carefully place the new mirror in position and using the screwdriver, fasten it securely.

Step 6. Before you close the UV lamp' housing, examine the mirror's surface it make sure it is free of fingerprints or other stains, which may cause erroneous UV intensity sensor readings. Clean it again if necessary.

Step 7. Ensure that the mirror is completely dry before re-assembling the UV lamp.

Figure 11-18: Removing the Mirror (Generic View)

Figure 11-19: Cleaning the Replacement Mirror

11.7 Cleaning / Replacing a Lamp's Quartz Tube and O-rings

The quartz tube is cleaned as needed according to the UVT Sensor readings and when deposit collects on the quartz tube. **The quartz tube's rubber O-rings must be replaced when dismantling the quartz tube**.

Under normal environmental conditions, the quartz tube's rubber O-rings (as shown in below) must be replaced once a year even if they pass visual inspection. For environments where the water temperature is above 70°C (160°F), the quartz tube's O-rings must be replaced quarterly, for which after the first year, O-rings may require replacement less frequently. For more information, consult your Atlantium representative.

Depending on the quality of the water being treated by the Atlantium Unit, the exterior surface of the quartz tube that houses a lamp may require periodic cleaning or replacement if after the optional Cleaning system and the CIP process the quartz tube is still not sufficiently clean. This is to be determined by the quality control officer at the facility.

Prepare the following:

- Replacement quartz tube (if replacing)
- Two O-rings (See view **B** in **Figure 11-20** below)
- #3 Allen wrench
- #4 Allen wrench
- Protective gloves
- Appropriate cleaning cloth. A mild, household cleaning solution
- Alcohol

While carrying the steps of this procedure, check that the O-rings on the components, such as the lamp housings and holders, are not damaged. If damaged, replace them before refastening the component in place.

➲ To clean or replace the quartz tube:

Powering Down the System

Step 1. On the Main screen of the **Controller**, press ⏻.

Step 2. Enter the password (the default password is **2468**). The Atlantium system is turned off.

Step 3. Using the viewport on the Atlantium Unit, check that the lamps are indeed turned off.

Step 4. Check the main screen of the **Controller** and verify that the system parameter for **Power** is **0%**.

A severe danger of electrocution exists if the lamp is not turned off during replacement. Be absolutely sure you have turned off the correct lamp's before you proceed to replace the lamp.

Isolating the Unit

Step 5. To isolate the Unit, close the Inlet and Outlet valves.

Step 6. Using the Drain valve, drain the water from the Unit.

Accessing the Quartz Tube

Quartz tube removal requires that the lamp connector assemblies, lamp housings (on both ends of the lamp) for systems that have them, and the lamp be removed. Follow from **Step 2.** on page **11-5** and remove the lamp connector assembly and lamp housing **from the side of the Unit with the UVIS sensor,** as well as the lamp, placing them in a secure location until they need to be reinstalled.

While pulling the lamp housing away, DO NOT tilt it and DO NOT pull it away from the lamp/sleeve axis at an angle. For systems with wave guide, the wave guide is fragile. Take care not to damage it when removing the lamp housing.

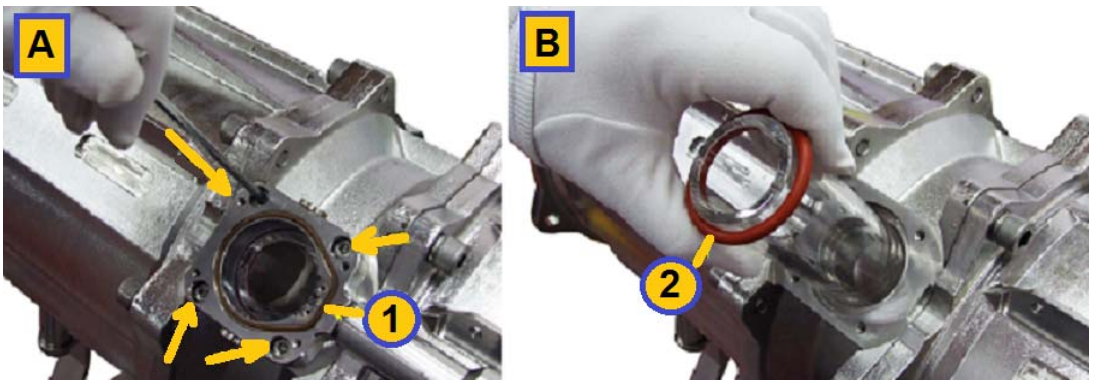

Figure 11-20: Replacing the Quartz Tube (Generic View 1)

Step 7. On one side of the quarts tube, using a #4 Allen wrench, remove the four Allen screws, opening them in a diagonal pattern (i.e. upper left, lower right, upper right, lower left) (arrow indicate the screws in view **A**) that secure the tube holder to the Unit. Loosen one screw gradually (2 turns) on one side and do the same on the screw at the diagonal opposite side of the tube (2 turns).

Step 8. Continue to alternate until both tube holders are loose, and then remove the screws completely.

Step 9. On the other side of the quarts tube, repeat to **Step 8.**

Removing the Quartz Tube

Wear protective gloves. To protect the quartz tube, do not touch the internal surface with your bare hands.

Step 10. On one side of the quartz tube, place the gloved palm of your hand over the quartz tube and gently push in. The quartz tube shifts inward. The o-ring on the side where you pushed slips out (if not, take it off).

Step 11. On the other side of the quartz tube, the tube sticks out slightly. **To prevent any damage to the quartz tube, make sure you pull the lamp's connector assembly straight out.** Carefully pull out the quartz tube and remove the O-ring (shown in view **B** above).

Cleaning the Quartz Tube

While pulling the connector assembly away, DO NOT tilt it and DO NOT pull it away at an angle.

Step 12. If there is a deposit buildup on the tube's exterior surface, clean it with a mild, household cleaning solution.

Step 13. Clean the exterior and interior surfaces with alcohol. If the tube cannot be cleaned to a pristine condition, replace it with a new one.

Step 14. Ensure that there is no residual moisture or high humidity on the inner surface of the quartz tube. If any visible moisture exists, dry it before inserting it in place.

Installing the Quartz Tube

Step 15. Mount the new O-ring onto the quartz tube (as shown in view **B** in **Figure** above) and insert the tube into the Unit. Make sure it is centered.

Step 16. Add the second new O-ring on the other side of the quartz tube.

Step 17. Install the quartz tube holder on the side without the UVIS mirror and close it loosely with 4 screws in a diagonal pattern (upper left, lower right, upper right, lower left). **Do not tighten the screws!!**

Figure 11-21: Replacing the Lamp's quartz tube (Generic View 2)

Assembly

Step 18. Install the quartz tube holder on the opposite side – the one with the UVIS mirror or wave guide.

For systems with wave guide, while reinstalling the tube holder, DO NOT tilt it and DO NOT insert it at an angle. the wave guide is fragile. Take care not to damage it when inserting the lamp housing.

Step 19. Using a #4 Allen wrench, close the screws in diagonal pattern and tighten them.

Step 20. To reinstall the lamp, follow from above.

Powering Up the System

Step 21. Open the Inlet and Outlet valves.

Step 22. For the replaced lamp. on its corresponding Connection Box, turn the switch

Step 23. On the Main screen of the **Controller**, press ⏻

Step 24. Wait 10 minutes for lamps to turn on and the system to stabilize.

Step 25. Open the viewport and check that there are no air bubbles in the water flow. If necessary, release all air bubbles from within the system.

Step 26. Check the main screen of the **Controller** or of the **TRACS** application (if included) and verify that the Atlantium system parameters for **Power**, **Flow**, and **UVT** are within wanted acceptable range and record is using the Table in **Appendix C**, ***Checking the System Parameters*** .

If the values are out of range, notify the executive maintenance engineer.

11.8 Checking / Replacing Sensors

From time to time, sensors may need to be checked (most frequently for condensation). During the Calibration process, the UVIS sensor also requires to be removed and temporarily replaced with a Reference Master sensor during. At times a sensor needs to be replaced. There are two types of UVIS sensors. The sensor itself is the same in both types. The difference is the sensor casing and how it is fastened to the Atlantium Unit. The two types are:

- **Adjustable UVIS sensor** - The Sensor's position is adjustable and its casing is fastened with nuts. See below.
- **Fixed UVIS sensor** - The sensor's casing screws into a fixed position. This type of sensor may contain a pinhole. See ***Replacing/Checking a UVT Analyzer or Fixed UVIS Sensor*** on page **11-23**.

11.8.1 Checking an Adjustable UVIS Sensor

Before removing the UVIS sensor to check it for moisture, do one of the following:

If you do not have a caliper measurement tool: You must mark the placement of the sensor so that you can replace it in the correct position.

If you have a caliper: You must measure the position of the sensor. (See ***Replacing a Lamp*** on page **11-9.**) or by using a marker to mark the position before removal.

Prepare the following:

- Wrenches # 24 and # 30
- Caliper measuring tool or thin marker

➲ To check an adjustable sensor (using a marker):

Step 1. In the **Controller**, note the value for UVIS for the lamp on which the sensor to be replaced. For details on finding the Controller screen with this information, see the section, ***System Tuning*** on page **11-24**.

Step 2. Mark the placement of the sensor so that you can replace it in the correct position. Use the thin marker to mark the position before removal.

Mark the sensor in two places, a line along the nut and across the nut and perpendicular to the first line. as shown in **(1)**.

Step 3. Check the sensor's lens for condensation. If present, using a dry lens cloth, dry the lens thoroughly.

Be sure that the lens is completely dry before it is returned to its place.

Step 4. When you return the sensor to its place, make sure the thin lines line up to the nut and align together.

Step 5. In the **Controller**, check that the value for UVIS for the lamp on which the sensor was replaced is identical to the value before the sensor was removed. For details on finding the Controller screen with this information, see the section, ***System Tuning*** on page **11-24**.

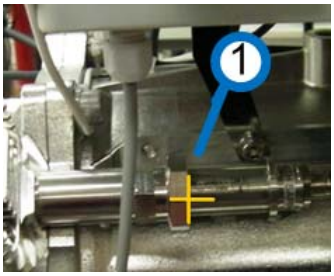

Figure 11-22: Marking the Sensor

➲ To check an adjustable sensor (using a caliper):

Step 1. Place the measurement tool on the UVIS sensor as show in **Figure 11-23** below. Use the screw to adjust the placement of the caliper measurement tool.

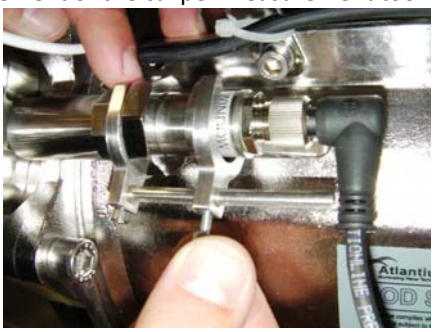

Figure 11-23: Measuring the UVIS sensor

Figure 11-24: Caliper Measurement Tool

Step 2. Carefully remove the caliper, taking care not to accidentally change its position, and set it aside.

Step 3. Remove the sensor according to the relevant steps in ***Replacing an Adjustable UVIS Sensor*** on page **11-21**.

Step 4. If you are in the midst of a Calibration process for the UVIS sensor, replace the original UVIS sensor with the Reference sensor.

Step 5. Check the sensor's lens for condensation. If present, using a dry lens cloth, dry the lens thoroughly.

Be sure that the lens is completely dry before it is returned to its place.

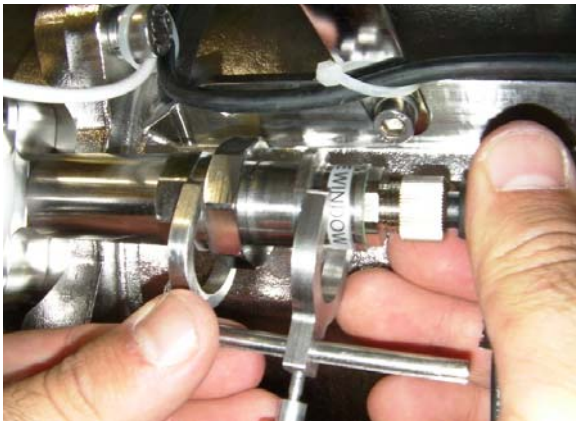

Figure 11-25: Adjusting the Reference sensor

Step 6. When you insert a Reference Master sensor or return a sensor to its place, using the set caliper (calibrated to the original UVIS sensor's position) adjust the sensor so that it is set to the position of the original. Refer to **Figure 11-25** to the left.

11.8.2 Replacing an Adjustable UVIS Sensor

Before removing the UVIS sensor when calibrating it against the Reference Master sensor or checking for moisture, you must mark the placement of the sensor so that you can replace it in the correct position. This is accomplished using the caliper measurement tool (See ***Replacing a Lamp*** on page **11-9.**) or by using a marker to mark the position before removal.

Replacing the UVIS sensor involve the loosening of the nut holding it in place.

Prepare the following:

- Replacement UVIS sensor or appropriate type
- Wrenches # 24 and # 30
- Caliper measuring tool or thin marker

➲ To replace an adjustable UVIS sensor:

Step 1. To disconnect the harness connector (shown in view **A** in **Figure 11-27**), unscrew the sensor's threaded locking nut.

Step 2. Grip the Sensor casing with wrenches **# 24** and **# 30**, as shown in view **B** below. The inset shows the wrench **#24** in the left hand gripping the casing's left band and wrench **#30** in the right hand gripping the casing's large nut on the right.

Step 3. Holding the left wrench **#24** steady, twist the right wrench **#30** to loosen the nut.

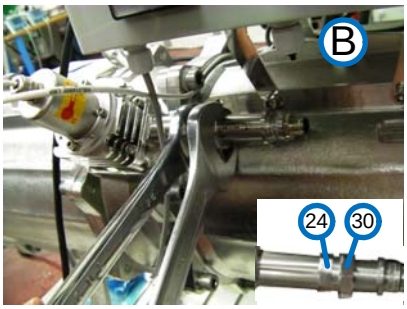

Figure 11-26: Replacing the Sensors (Generic View 2)

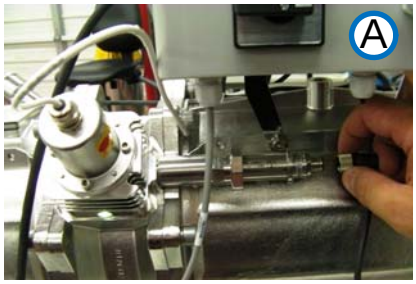

Figure 11-27: Replacing the Sensors (Generic View 1)

Step 4. Carefully pull the sensor out of the housing **(C)**. The Large nut comes off together with the sensor.

Step 5. To enable the system to track relevant data about the sensor, make a note of the serial number of the replacement sensor (for later use).

Step 6. Verify that the sensor lens **(1)** is clean. If needed, using a lens cloth, clean it. (See below.)

Be sure that the lens is completely dry before it is returned to its place.

Step 7. When replacing a sensor, remove the nut **(2)** and the washer **(3)** shown in **Figure 11-29** below.

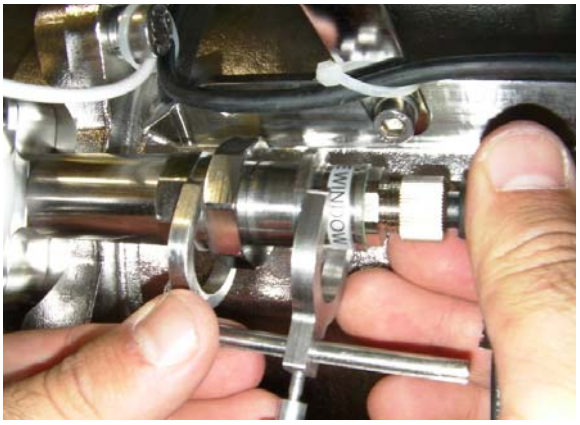

Figure 11-28: Replacing the Sensors (Generic View 3)

Step 8. Position the nut **(2)** on the sensor as shown above. Then position the washer **(3)** on the sensor as shown above.

Step 9. Insert the sensor into the housing.

- If you are replacing the sensor, positioning it about 2/3 the way in. Fasten the nut onto the housing.
- If you are returning a sensor that was removed for checking or calibration, see ***To check a sensor or remove it for calibration*** on page **11-20**.

Step 10. Grip the Sensor casing with wrenches **# 24** and **# 30**, as shown in view **B** above. The inset shows the wrench **#24** in the left hand gripping the casing's left band and wrench **#30** in the right hand gripping the casing's large nut on the right.

Step 11. Holding the left wrench **#24** steady, twist the right wrench **#30** to tighten the nut.

Step 12. Reconnect the harness's threaded cap to the new sensor.

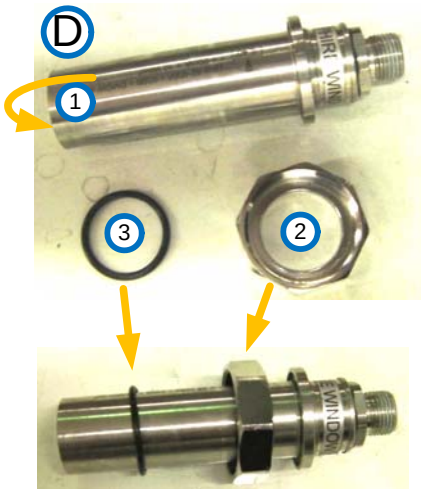

Figure 11-29: Sensor, washer and nut

Step 13. For a replacement sensor, in the **Controller**, In the **Controller**, perform **System Tuning**, see the section, ***System Tuning*** on page **11-24**.

11.8.3 Replacing / Checking a UVT Analyzer or Fixed UVIS Sensor

Performed as needed

For system that may contain a fixed UVIS sensors, this sensor-replacement procedure is required. If your system contains the adjustable UVIS sensor, see ***Checking an Adjustable UVIS Sensor*** on page **11-20**.

For some of the sensors, there is an pinhole located on the sensor's window. This pinhole is calibrated by Atlantium for the specific measurement point. Do not switch disks between ports. Before inserting the sensor, be sure to include the pinhole if present.

Prepare the following:

- Replacement sensor

➲ To replace a sensor:

Step 1. To disconnect the harness connector (shown by the arrow in view **A** below), unscrew the sensor's threaded locking nut.

Step 2. Unscrew the sensor's threaded locking nut from the bottom of the sensor housing, as shown in view **B**.

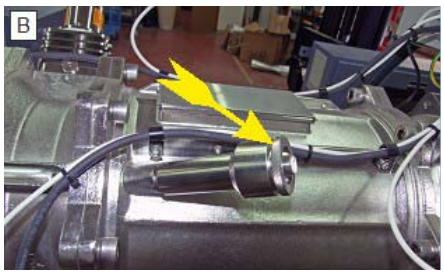

Figure 11-30: Replacing the Sensors 2 (Generic View 2)

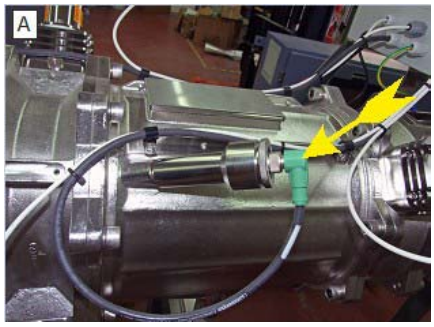

Figure 11-31: Replacing the Sensors 2 (Generic View 1)

Step 3. Carefully pull the sensor out of the housing **(C)**.

Step 4. If an pinhole **(E)** is present it slides out.

Step 5. Unpack the new sensor **(D)** and (if it is supplied) the sensor pinhole.

Figure 11-32: Replacing the Sensors 2 (Generic View 4)

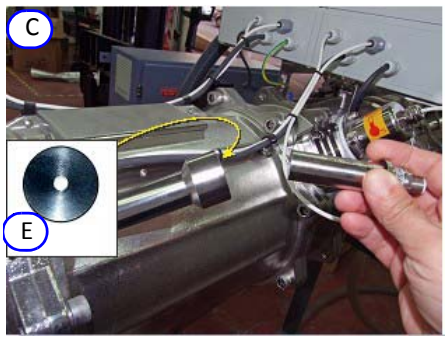

Figure 11-33: Replacing the Sensors 2 (Generic View 3)

Step 6. To enables the system to track relevant data about the sensor, make a note of its serial number.

Step 7. Verify that the sensor lens **(F)** is clean. If needed, using a lens cloth, clean it.

Step 8. If an pinhole **(E)** is present, insert it.

Step 9. Insert the sensor into the housing, and screw the threaded cap back onto the housing, securing the sensor.

Step 10. Reconnect the harness's threaded cap to the new sensor.

Step 11. In the **Controller**, perform **System Tuning**, see the section, ***System Tuning***, below.

11.9 System Tuning

System tuning is performed on these occasions:

- As the last step in system installation
- As the last step when lamps are changed and after 100 operating hours (as needed)
- Upon advice of an Atlantium Service Representative when the system is reset

➲ To tune the Atlantium system:

Step 1. Just prior to tuning, obtain a water sample from the sampling valve on the inlet side of the Atlantium Unit. Test the water sample in an external spectrophotometer. Write down the results. If a spectrophotometer in not available, record the current UVT value shown on the system's display.

Step 2. To shutdown the Atlantium system, on the **Controller** main screen, press ⏻ and wait approximately three minutes for the **Ready Lamps Off** signal to transmit.

Step 3. On the Atlantium Unit, locate each UVIS and UVT Intensity Sensor.

Step 4. On each sensor (refer to the figures in the section, ***To replace an adjustable UVIS sensor:*** on page **11-22**):

a Unscrew the locking nut and gently pull out the sensor.

b With a dry and clean lint free cloth, wipe the UVIS sensor's quartz window.

c Reinsert the sensor and replace the locking nut.

Step 5. To turn on the Atlantium system, on the **Controller** main screen, press ⏻ and wait approximately three minutes for the **Ready Lamps On** signal to transmit.

Step 6. To access the **Controller's** Settings screen, from the **Main Operations** screen, press . The **Password** screen appears.

Step 7. Using the numbered keys, enter the password (default password is **1357**) and press . The Settings screen appears.

Step 8. To verify that the lamps are already on, for **Lamps**, press ▶. The Lamps Settings screen appears. (Figure **11-6** , on page **11-11**.) Note that the lamps are set to **On**.

Step 9. Press . The settings are saved and you are returned to the Settings screen.

Step 10. For **Mode**, press ▶. The Mode Settings screen appears.

Step 11. For **Power**, using the ▲▼ arrows, turn each lamp up to **100%** power.

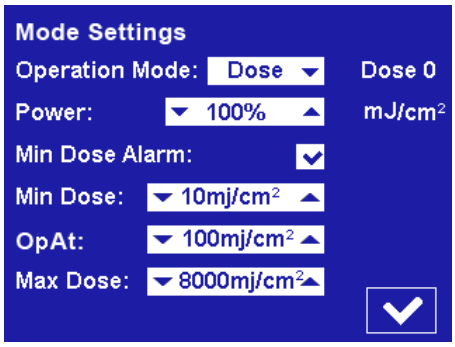

Figure 11-34: Mode Settings Screen

Step 12. Press . The settings are saved and you are returned to the Settings screen.

Step 13. For **Tuning**, press ▶. The System Tuning screen appears.

Step 14. For **UVT**, use the ▲▼ arrows to enter the water test results.

Step 15. For **UVIS 1** and **2** (if your system has two lamps):

- For tuning when replacing a lamp, use the ▲▼ arrows, to enter 100%.
- For tuning with existing lamps, leave the settings as is.

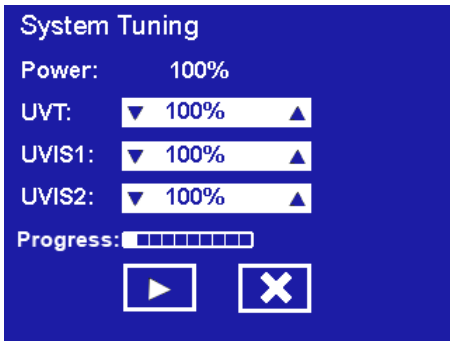

Figure 11-35: System Settings Screen

Step 16. Press . The systems tunes and the **Tune** bar displays the progress.

Step 17. When tuning is complete, the activate arrow turns to . Press it. The settings are saved and you are returned to the Settings screen.

11.10 Advance Maintenance

The advanced maintenance procedures require opening the Connection Box. **Local regulations may require a certified electrician to perform any of these procedures.**

This section contains:

- ***Replacing the Temperature Sensor*** on page **11-26**
- ***Replacing the Temperature Converter Card*** on page **11-27**

11.10.1 Replacing the Temperature Sensor

Performed as needed

In the event that the Temperature sensor requires replacement, this section details the procedure.

Follow your local regulations regarding whether a certified electrician may be required to perform this procedure.

Any person involved in handling the Connection Box card or its components is required to wear an electrostatic discharge (ESD) Wrist Strap.
Connect the ESD Wrist Strap to any bolt on the body of the Atlantium Unit or to the metal bracket under the Connection Box using a banana plug or an alligator clip.

Prepare the following:

- Replacement Temperature sensor
- #5 Allen wrench
- #3 Flat screwdriver
- #2 Phillips screwdriver

To replace the Temperature sensor:

Step 1. Turn the Mains circuit breaker to the **Off** position.

Step 2. Using the appropriate Allen wrench, open the Connection Box cover.

Step 3. Verify with volt meter that there is no power in first Connection Box card and that no LED is lit on the card.

Step 4. Locate and disconnect the Temperature Sensor connector **(A)**.

Step 5. Detach the wire from the terminal connector and remove the wire from the Connection Box via the gland.

Step 6. Using a #2 Phillips screwdriver, detach the temperature sensor **(C)** from the Atlantium Unit.

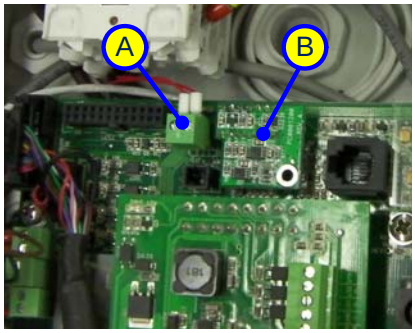

Figure 11-36: Location of the Temperature Sensor Connector (Generic)

Step 7. Attach the replacement Temperature sensor **(C)** to the Atlantium Unit.

Step 8. Thread the wire through the gland and attach it to the terminal connector.

Step 9. Insert the connector **(A)** to its socket on the terminal block.

Step 10. Return the Connection Box cover and using the Allen wrench, fasten the screws. Tighten them in a diagonal pattern.

Step 11. Turn the Mains circuit breaker to the **On** position.

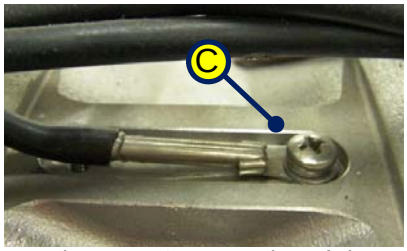

Figure 11-37: Location of the Temperature Sensor on the Atlantium Unit

11.10.2 Replacing the Temperature Converter Card

Performed as needed

In the event that the Temperature sensor card requires replacement, this section details the procedure.

Follow your local regulations regarding whether a certified electrician may be required to perform this procedure.

Any person involved in handling the Connection Box card or its components is required to wear an electrostatic discharge (ESD) Wrist Strap.
Connect the ESD Wrist Strap to any bolt on the body of the Atlantium Unit or to the metal bracket under the Connection Box using a banana plug or an alligator clip.

Prepare the following:

- Replacement Temperature Converter card
- #5 Allen wrench
- #2 Phillips screwdriver

➲ To replace the Temperature sensor card:

Step 1. Turn the Mains circuit breaker to the **Off** position.

Step 2. Using the appropriate Allen wrench, on the first Connection Box, open the Connection Box cover.

Step 3. Verify with volt meter that there is no power in first Connection Box card and that no LED is lit on the card.

Step 4. Locate and carefully pull off the Temperature Sensor card **(C)**.

Step 5. Aligning the pins of the replacement Temperature Sensor card **(C)** with the connector (on the board) on the Connection Box card, carefully insert the small card into the connector of the Connection Box card.

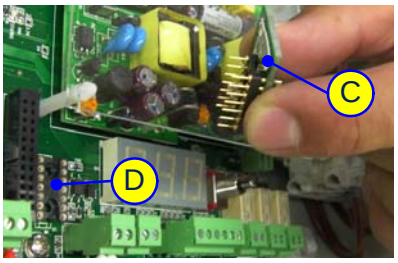

Figure 11-38: Replacing the Temperature Sensor Card (Generic)

Step 6. Return the Connection Box cover and using the Allen wrench, fasten the screws. Tighten them in a diagonal pattern.

Step 7. Turn the Mains circuit breaker to the **On** position.

12 Troubleshooting

The sections here are comprised of messages headers that appear as error messages in the **Controller.**
Utilize the following safety notes when reviewing the troubleshooting issues:

The solution to the problem might involve exposure to UV light.
The system generates ultraviolet (UV) light within the Atlantium Unit, which can cause serious eye damage or blindness if you stare at it directly when it is working.
Do not look directly into the lamp enclosure during system operation, or while examining or servicing the system's internal components when the system is operating, or when a lamp's caps are open.

The solution to the problem might involve working in a high-voltage environment.
Before replacing a UV lamp or other components, and during any maintenance requiring lamps to be turned off, **make sure the switch on the ballast of the relevant lamps are turned OFF.**
Place a sign on the relevant Ballast Modules and **Controller** alerting others **NOT** to touch the switch and touch screen during maintenance so that no one can inadvertently turn it on while maintenance is in progress.

The solution to the problem might involve working with hot surface.
Do not touch the UV lamp with your bare hands. Lamps can reach a temperature of 1,000°C under operating conditions.
Wait at least 10 minutes until the lamp is cooled down before replacing it.
Use appropriate protective gloves both to protect your hands and to avoid skin oils that leave fingerprints and/or harm the UV lamp.

Troubleshooting issues

The UV dose is below the allowable threshold on page **12-2**
Unit temperature is too high on page **12-3**
Unit temperature is critically high! on page **12-3**
The rate of the water flow is too low on page **12-4**
UV lamp ignition failed on page **12-5**
Temperature sensor fault on page **12-6**
Ballast temperature is too high on page **12-6**
System type settings error on page **12-7**
Lamp mains failure on page **12-7**
Unexpected failure for an unknown reason on page **12-8**
Lost communication with ballast module on page **12-9**
Clean system deposit on page **12-9**

12.1 The UV dose is below the allowable threshold

Controller displays this warning message
UV Dose Below Allowable Threshold

!

	Possible Cause	Solution	
1	The Water flow rate is too high.	Check the water flow on the Controller's main screen. If it is higher than normal, decrease the rate of the water flow through the system. See ***Configuring the Flow Meter*** on page **7-6.**	
2	UVT has declined because of chemicals (chlorine, etc.) or solids (sand, silt, etc.) in the water flow.	Carry out cleaning procedures. See ***Cleaning In Place (CIP)*** on page **11-2**. Try to improve the water condition. Check on the status of upstream filtering equipment and upstream chemical processes.	
3	UV lamp efficiency has dropped.		Check the UVIS sensors and clean them if necessary. Check the lamp's efficiency reading. If it is low, replace the lamp. See ***Replacing a Lamp*** on page **11-9.**
4	The UVT sensor has malfunctioned.		Switch between the UVT and UVIS sensors and see if the reading increased. If the reading is increased, switch the sensors back and replace the UVT sensor. See ***To replace an adjustable UVIS sensor:*** on page **11-22.**
5	The system is operating on **Power mode** instead of **Dose mode**.	If the system settings are in Power mode, in the **Controller**, access the Settings screen and change the **Operation Mode** from **Power** to **Dose** setting. Or, change the Power mode settings to allow higher power to respond to operating conditions. See ***Configuring the Operation Mode*** on page **7-9.**	

12.2 Unit temperature is too high

Controller displays this warning message
Unit Temperature Is Too High

	Possible Cause	Solution
1	The Max temperature value is too low.	Check the system's **Max Temperature** settings. See ***Configuring More Settings*** on page **7-12.**
2	The water flow has significantly decreased.	Check the flow reading in the **Controller**'s main screen to see if it has deviated from normal flow. Check the flow via the flowmeter. Check the water source for a problem.
3	There are air bubbles or the system is not fully filled with water.	Verify this by looking through the Atlantium Unit's view port.
4	You did not install a designated air release valve at the highest point on the inlet side of the system.	Release the air by installing a designated air release valve at the highest point on the inlet side of the system.

12.3 Unit temperature is critically high!

Controller displays this warning message
Unit Temperature Critically High

	Possible Cause	Solution	
1	If this message appeared right after a message indicating loss of communication with the Ballast Module (and both messages refer to the same lamp) and the temperature display on the monitor is 165°C/365°F, then most likely the communication between the **Controller** and the Connection box is lost.	Follow the solutions offered in ***Ballast temperature is too high*** on page **12-6**.	
2	The temperature reading dropped to 185°C / 365°F due to a short-circuited in the Temperature sensor, Temperature converter card or Connection Box Card		Replace the temperature sensor. See ***Replacing the Temperature Sensor*** on page **11-26.** If the problem persists replace the Temperature Converter card. See ***Replacing the Temperature Converter Card*** on page **11-27.** If the problem still persists replace the Connection Box card. See on page **11-27.**
3	The Max temperature value is too low.	Check the system's **Max Temperature** settings. See ***Configuring More Settings*** on page **7-12.**	
4	There is no water flow.	Check the flow reading in the **Controller**'s main screen to see if it has deviated from normal flow. Check the flow via the flow meter. Check the water source for a problem.	

	Possible Cause	Solution
5	There are air bubbles or the system is not filled with water to capacity.	Verify this by looking through the Atlantium Unit's view port.
6	You did not install a designated air release valve at the highest point on the inlet side of the system.	Release the air by installing designated air release valve at the highest point on the inlet side of the system.
7	The Temperature jumper is missing.	Verify the existence of the Temperature jumper in its designated location on the Connection Box card #1. On the last Connection Box, open the top cover and locate Jumper **J32** as shown marked **A** in the figure. Figure 12-1: Jumper Location
8	The Temperature sensor is faulty.	Replace the temperature sensor. See ***Replacing the Temperature Sensor*** on page **11-26.**
9	The Temperature Converter card is faulty.	If the problem persists replace the Temperature Converter card. See ***Replacing the Temperature Converter Card*** on page **11-27.**

12.4 The rate of the water flow is too low

Controller displays this warning message
Water Flow Rate: Too Low

	Possible Cause	Solution
1	There is an obstruction in the upstream system or pump malfunction.	If this is a planned decrease or temporary stop, change the **Low Flow mode** settings from **Shutdown mode** to **Restart**. See ***Setting the Low Flow Mode*** on page **7-10.** This sets the system to Standby. Check pumps, filters and system feed and increase the flow rate. See ***Configuring the Flow Meter*** on page **7-6.**
2	There is no water running through the system.	If this is a planned stop, change the **Low Flow mode** settings from **Shutdown mode** to **Restart**. See ***Setting the Low Flow Mode*** on page **7-10.** This sets the system to Standby.
3	The flow meter/flow switch is faulty or a wire has been disconnected.	Check the wires connecting the flow meter/flow switch and reconnect or replace if damaged. Replace the flow meter/flow switch is faulty.

12.5 UV lamp ignition failed

Controller displays this warning message
UV Lamp %d Ignition Failed

	Possible Cause	Solution	
1	The system is set to the wrong model.	In the **Controller**, access **Technician screen #2**. Verify that the system is set to the correct model, number of lamps and branches. See ***Verify the System Settings*** on page **7-13.**	
2	One or more connectors are burnt out.		Turn off the system's main power source On each Connection Box, turn the switch to the Off position. Disconnect and thoroughly inspect the Ballast Module connectors. IF replacement is needed, contact Atlantium Technical Support.
3	The power supply inside the Ballast Module is faulty.	 	In a system with more than one lamp, if possible, switch between the Ballast Module connectors in order to verify the Ballast is faulty, if so replace the Ballast Module. In a system with only one lamp, replace the Ballast Module with a new one. See ***Connecting the Ballast Module Cables*** on page **5-19** and ***Installing the Ballast Module(s)*** on page **5-16**
4	A lamp is faulty/burned out.	 	In a system with more than one lamp, switch between the lamps in order to verify the lamp is faulty, if so replace the lamp. In a system with only one lamp, replace the lamp with a new one. See ***Replacing a Lamp*** on page **11-9.**
5	The ID number of the Connection Box card does not match ID number of the Ballast Module.		On the each Connection Box, open the top cover and locate the 3-digit display (as shown on the right). Check that the set number is identical to the number marked on corresponding Ballast Module. If not identical, use the switch to change it to the correct number. 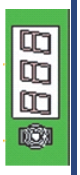
6	One or more of the fuses in the Connection Box is burned out.		Replace the burned out fuse in the Connection Box. See on page **11-27.** Contact Atlantium support for further instructions.
7	The Connection Box card is faulty.		On the Connection Box, open the top cover and check that the 3-digit display and LEDs are lit. If they are dark, replace the Connection Box card. Contact Atlantium support for further instructions.

12.6 Temperature sensor fault

Controller displays this warning message
Temperature Sensor Fault

	Possible Cause	Solution
1	If this message appeared right after a message indicating loss of communication with the Ballast Module (and both messages refer to the same lamp) and the temperature display on the monitor is 165°C/365°F, then most likely the communication between the **Controller** and the Connection box is lost.	Follow the solutions offered in ***Ballast temperature is too high*** on page **12-6**.
2	The temperature reading dropped to 0°C / 32°F due to a short-circuited in the Temperature sensor, Temperature converter card or Connection Box Card	Replace the temperature sensor. See ***Replacing the Temperature Sensor*** on page **11-26.** If the problem persists replace the Temperature Converter card. See ***Replacing the Temperature Converter Card*** on page **11-27.** If the problem still persists replace the Connection Box card. Contact Atlantium support for further instructions.

12.7 Ballast temperature is too high

Controller displays this warning message
Ballast Temp Too high Lamp %d Fault

	Possible Cause	Solution
1	The Connection Box environment's temperature is above 80 degrees Celsius.	Check the environment temperature in the Connection Box area, open the connection box and look for a possible cause for the heating. See ***Cabling Components*** on page **5-20.**

12.8 System type settings error

Controller displays this warning message
Unset Error Fault at Lamp %d

	Possible Cause	Solution
1	**Lamp Unset:** The System is set to the wrong system model. (Example: System is **RZ163**, but the **Controller** settings read **RZ300**.)	In the **Controller**, access the **Technician screen #2**. See ***Verify the System Settings*** on page **7-13.** Verify that the system is set to the correct system model, number of lamps and branches. If the system is already set to the correct model, you might need to refresh the selection: **Step 1.** Change the model to a different one (e.g. if your system is **RZ163**, change the selection to **RZ300**). **Step 2.** Exit the **Technician** screen and close the **Controller** circuit breaker. **Step 3.** Open the **Controller** circuit breaker and enter **Technician** screen. **Step 4.** Change the model back to the correct model of your system. **Step 5.** Exit the technician screen and close the **Controller** circuit breaker. **Step 6.** Open the **Controller** circuit breaker and turn the lamps on.
2	Your **RZ163** system is supposed to contain High Power lamps, but actually does not contain this type of lamp(s).	Make sure the lamps inside the system are the High Power type. Refer to ***Replacing a Lamp*** on page **11-9** for details on checking the lamps.

12.9 Lamp mains failure

Controller displays this warning message
Lamp Mains Fail Lamp %d Fault

	Possible Cause	Solution	
1	**Mains Fail issue:** The ballast does not receive enough power from the mains.		A certified electrician is required to verify that the Ballast Module receives the proper voltage feed from the Mains via the Connection Box.
2	One or more of the fuses in the Connection Box is burned out.		A certified electrician is required to replace the burned out fuse in the Connection Box. Contact Atlantium support for further instructions.
3	A combined problem inside the Ballast Module regarding power feed and temperature.	Contact Atlantium support for further instructions.	

12.10 Unexpected failure for an unknown reason

Controller displays this warning message
Unexpected Failure Unknown Reason %d Fault

	Possible Cause	Solution	
	Lamp Unknown: The lamp was unexpectedly shutdown due to one of the following reasons:		
1	There is a power interruption (for micro seconds) that caused the Ballast Module to stop working while the Connection Box Card still held power.	Turn the lamps back on using the On/Off button on the **Controller**'s main screen.	
2	The Lamp burned out during operation.		Replace the Lamp. See ***Replacing a Lamp*** on page **11-9.**
3	The Lamp's connector(s) burned during operation.		Replace the connectors. Contact Atlantium support for further instructions.
4	Ballast Module malfunctioned during operation.		Replace the Ballast Module. ***Connecting the Ballast Module Cables*** on page **5-19**, ***Installing the Ballast Module(s)*** on page **5-16**, and ***Mounting and Connecting the OVPD Module*** on page **5-8**.

12.11 Lost communication with ballast module

Controller displays this warning message
Lost Communication with Ballast Module

	Possible Cause	Solution
1	**Communication Error:** The communication between the **Controller**'s display card and Connection Box card was lost while the lamp was on or during the ignition process.	Verify that all Connection Box cards have power and the communication wire is connected properly on both ends. If the problem persists, contact Atlantium support for further instructions.
2	No power is feeding into the Connection Box.	Open the Connection boxes and verify that all Connection Box s have power. See ***Cabling Components*** on page **5-20.**
3	A wire is loose.	With a small flat screwdriver go over all the communication screws in the **Controller** and Connections Box s and make sure all wires are located properly in their place and are well tightened. ***Controller Connections*** on page **5-10** and ***Cabling Components*** on page **5-20**.
4	A jumper is missing.	A communication jumper might need to be installed, contact Atlantium Support for further instruction.
5	Ground is not connected to the **Controller**'s power inlet.	A certified electrician is required to verify that the **Controller** is properly grounded. ***Controller Connections*** on page **5-10**
6	There is a Hardware problem in the **Controller**'s display card or in the Connection Box.	Contact Atlantium support for further instructions.

12.12 Clean system deposit

Controller displays this warning message
Please Clean System Deposit

		Possible Cause
1	Excessive mineral deposit has collected on the quartz tube.	Perform the Cleaning in Place procedure. See ***Cleaning In Place (CIP)*** on page **11-2.**
2	The **UVT Min** value in the Technician screen is set too high.	See ***Configuring the Technician Settings*** on page **7-6.** Set the**UVT Min** value to **0**.

Appendix A Modbus Communication Protocol

Modbus is an application layer messaging protocol for client/server communication between devices connected on different types of buses or networks.

Modbus is often used to connect a supervisory computer with a remote terminal unit (RTU) in supervisory control and data acquisition systems.

For information on how to configure the communication properties and make the cable connections, see ***Modbus Communication Connections*** on page **5-25**.

Modbus registers are meant to be used for specific commands in a command algorithm. Do not write to any register if you do not intend to use it.

A.1 Modbus Registry Map

The table on the following pages provides the information you need to help you configure your network to properly communicate with the Atlantium system.

Table A-1: Modbus Registry Map (*) R = Read Only RW = Read/Write

Registry address	Registry name	Divide	Type	Comment	Units	Read/ Write
0	System On/Off		Coil Bit	0 -> Off, 1 -> On		R/W
2	Operation Mode Dose/ Power		Coil Bit	1 -> Dose, 0 -> Power		R
6	Alarm/Ready output		Coil Bit	0 -> Alarm, 1 -> Ready		R
9	Dose < min dose		Coil Bit	1 -> OK, 0 -> Fault		R
11	Over Temp		Coil Bit	1 -> OK, 0 -> Fault		R
14	Min flow alarm		Coil Bit	1 -> OK, 0 -> Fault		R
15	Cleaner System Off/On		Coil Bit	0 -> Off, 1 -> On		R
16	General alarm		Coil Bit	1 -> OK		R
17	Cleaning System exist		Coil Bit	0 -> Exist		R
18	Critical Over Temp		Coil Bit	1 -> OK		R
19	System Ready		Coil Bit	1 -> Raedy		R
23	Lamp 1 Enable/Disable		Coil Bit	1 -> Enable, 0 -> Disable		R/W
24	Lamp 2 Enable/Disable		Coil Bit	1 -> Enable, 0 -> Disable		R/W
25	Lamp 3 Enable/Disable		Coil Bit	1 -> Enable, 0 -> Disable		R/W
26	Lamp 4 Enable/Disable		Coil Bit	1 -> Enable, 0 -> Disable		R/W
100	UVT	:100	Register		%	R
101	Flow	:10	Register		m^3/h	R
102	Dose		Register		mJ/cm^2	R

Table A-1: Modbus Registry Map (*) R = Read Only RW = Read/Write

Registry address	Registry name	Divide	Type	Comment	Units	Read/ Write
103	System Power		Register		%	R/W
106	Status lamp 1		Register		%	R
107	UVT lamp 1		Register		%	R
108	Age hours lamp 1 MSB		Register		Hours	R
110	Temperature °C	:100	Register		°C	R
111	Power lamp 1	:1000	Register		KW	R
112	UVIS lamp 1	:100	Register		mA	R
113	UVTS lamp 1	:100	Register		mA	R
114	Status lamp 2		Register		%	R
115	UVT lamp 2		Register		%	R
116	Age hours lamp 2 MSB		Register		Hours	R
119	Power lamp 2	:1000	Register		KW	R
120	UVIS lamp 2	:100	Register		mA	R
121	UVTS lamp 2	:100	Register		mA	R
125	Set for (dose)	:10	Register			RW
126	Minimum Dose	:10	Register			RW
127	Minimum Dose Alarm	:10	Register			RW
128	Maximum Dose	:10	Register			RW
140	DPM 1 Counter Low		Register			R
141	DPM 1 Counter High		Register			R
142	DPM 2 Counter Low		Register			R
143	DPM 2 Counter High		Register			R
144	DPM 3 Counter Low		Register			R
145	DPM 3 Counter High		Register			R
146	DPM 4 Counter Low		Register			R
147	DPM 4 Counter High		Register			R
200	UVT lamp		Register		%	R
201	Age hours lamp 3 MSB		Register		Hours	R
203	Power lamp 3	:1000	Register		KW	R
204	UVIS lamp 3	:100	Register		mA	R
205	UVTS lamp 3	:100	Register		mA	R
210	UVT lamp 4		Register		%	R
211	Age hours lamp 4 MSB		Register		Hours	R

Table A-1: Modbus Registry Map (*) R = Read Only RW = Read/Write

Registry address	Registry name	Divide	Type	Comment	Units	Read/ Write
213	Power lamp 4	:1000	Register		KW	R
214	UVIS lamp 4	:100	Register		mA	R
215	UVTS lamp 4	:100	Register		mA	R
216	Status lamp 3		Register			R
217	Status lamp 4		Register			R

Appendix B System Messages

The table below details the message that can appear on the **Controller**'s screen or in the Event logs. A number of parameters are User Defined and include setting a value and upon reaching, exceeding or falling below it, an Action is set to be triggered. The Action is also configurable. The options are:

- **None** - The event is not considered an error, so no corrective action is taken. No warning message is issued.
- **Caution** - The caution alerts you to an anomaly based on the user preferences.
- **Warning** - One or more warning messages are issued and it triggers a pop-up window message and a General Alarm (if configured, see ***Configuring the General Alarm*** on page **7-4**).
- **Shut-Down** - In case of a serious error or dangerous condition, the system shuts down and triggers a pop-up window message and a General Alarm (if configured, see ***Configuring the General Alarm*** on page **7-4**).

The other parameters are system defined. The type column in the table below details the type of parameter.

Table B-1: **Controller**'s Messages

Key	Type	Event Log	Line Message / Popup Title	Popup Message
1	The value is User Defined	Over Max. Dose	The dose is above the maximum dose	The dose is above the maximum defined in the system settings.
2	The value is User Defined (The default is None)	Dose Too Low	The UV dose is too low	Dose too low! Below minimum!
4	Warning - The default temperature threshold is 5°C (41°F) less than what is defined for Over Temp	Temp. Too High	Temperature is Too High	The lamp's temperature getting too high -- check water flow.
5	Shutdown - - The default temperature threshold is User Defined	Over Temp	Temperature is Critically High!	The lamp's temperature is too high and the unit will shut down.
6	Shutdown - Hardware malfunction	Temperature Sensor Fault	Temperature Sensor Fault	One of the temperature sensors has malfunctioned or the communication with the Connection Box card was lost.
9	Shutdown ---The Minimum Flow is User Defined	Low Flow	The rate of the water flow is too low	The water flow rate is lower than the minimum flow rate. Check the water flow.
10	The value is User Defined	High Flow	The rate of the water flow is too high	The water flow rate is higher than the maximum flow rate allowed. Check the water flow.
11	The value is User Defined	Transmission Low	UVT is too low!	UVT is below the required value
13	Shutdown - DPM malfunction	Cleaner Fault	Cleaner Fault	Cleaner Mechanism Fault
14	Warning	Lamp Ignition	UV Lamp Ignition Failed!	The UV lamp has failed to ignite due to an electronic fault. The UV lamp may be burnt out or a wire may be disconnected.

Table B-1: **Controller**'s Messages

Key	Type	Event Log	Line Message / Popup Title	Popup Message
16	Appears in the Event Log only - pops up from additional info from Event Log	User On		The Controller or TRACS screen or an external signal turned on the system.
17	Appears in the Event Log only - pops up from additional info from Event Log	User Off		The Controller or TRACS screen or an external signal shut down the system.
18	Appears in the Event Log only - pops up from additional info from Event Log	Auto On		System power was restored or flow raise above minimum. The lamps reignite.
19	Appears in the Event Log only - pops up from additional info from Event Log	Auto Off		Flow rate below user low flow setting; automatic shutdown.
20	Appears in the Event Log only - pops up from additional info from Event Log	Lamps On		System Ready. All the enabled lamps are on.
24	Caution	Dose On Spec	Dose On Spec	The UV dose being delivered by the system is above the minimum validated value
25	Warning	Dose Off Spec	Dose Off Spec	The UV dose being delivered by the system is below the minimum validated value
26	Caution	UVT On Spec	UVT On Spec	The UVT value is above the minimum validated UVT
27	Warning	UVT Off Spec	UVT Off Spec	The UVT value is below the minimum validated UVT
28	Caution	Flow On Spec	Flow On Spec	The flow rate is below the maximum validated flow
29	Warning	Flow Off Spec	Flow Off Spec	The flow rate is above the maximum validated flow
33	Warning	UVT 4th calibration failed	UVT Analyzer 4th calibration check failed	UVT Analyzer calibration check failed 4 times in a row. System is off-spec
34	The value is User Defined (Default as None)	Validated Min UVT	Validated Min UVT	UVT is below Validated Min UVT
35	The value is User Defined (Default as None)	Validated Max Flow	Validated Max Flow	Flow is above Validated Max Flow
37	Appears in the Event Log only - pops up from additional info from Event Log	EPA Daily Log	EPA Daily Log	EPA Daily Log
38	Appears in the Event Log only - pops up from additional info from Event Log	EPA Off -Spec	EPA Off -Spec	EPA Off Spec information

Table B-1: **Controller**'s Messages

Key	Type	Event Log	Line Message / Popup Title	Popup Message
39	Appears in the Event Log only - pops up from additional info from Event Log	Power Failure	Power Failure	The system was turned off due to power failure
41	The value is User Defined	UV Dose	The UV Dose is below the set level	The UV Dose is below the Operate At dose
42	Warning - Sensor needs to be replaced or there may be a loose wire	Temp. Sensor Fault	Temperature Sensor Fault	fault on lamp temperature sensor
43	Shutdown	Lamp Shutdown	The UV lamp unexpectedly shutdown	Lamp shutdown
44	Appears in the Event Log only - pops up from additional info from Event Log	CRC Error	CRC Error	System error parameters and counters might be reset to factory defaults. Please check
45	Shutdown	PS Fault	Power supply fault	Ballast fault [value displayed], error code: [number displayed].
46	Warning	Communication Error	Communication Error	Lost communication with the Ballast Module
47	Appears in the Event Log only - pops up from additional info from Event Log; Is generated at midnight every day	PMO Info	PMO Info	PMO Information Lowest dose: [value displayed].
48	PMO only upon divert	Dose Divert	Dose Divert	Low Dose divert; flow may be too high; UVT may be too low
49	Appears in the Event Log only - pops up from additional info from Event Log	UVIS calib info	UVIS calib info	UVIS calib lamp [value displayed]
50	Appears in the Event Log only - pops up from additional info from Event Log	UVT calib info	UVT calib info	UVT calib lamp [value displayed]
51	Warning	TRACS Connection Lost	Connection Lost	The Control Module lost connection with the TRACS
52	Appears in the Event Log only - pops up from additional info from Event Log	TRACS Connection Restored	Connection Restored	Connection between the Control Module \n and the TRACS was restored
53	Appears in the Event Log only - pops up from additional info from Event Log	Settings Changed	Settings changed	Settings changed [value displayed]

Table B-1: **Controller**'s Messages

Key	Type	Event Log	Line Message / Popup Title	Popup Message
54	Caution	UVIS is calibrated successfully	UVIS is calibrated successfully	UVIS is calibrated successfully
55	Caution	UVIS calibration failed	UVIS Calibration Failed	UVIS calibration failed, Sensor is out of calibration. Correction Factor is implemented
56	Caution	UVT successful calibration check	UVT successful calibration check	UVT Analyzer successful calibration check
57	Caution	UVT check failed	UVT Analyzer check failed	UVT Analyzer check failed; Auto recalibration was done

Appendix C Checking the System Parameters

You can use the checklist below to keep a record of your checks on Atlantium system parameters. **Print this page**.

Table C-1: Atlantium System Parameters Checklist

Date	Time	Lamp ID	Power	Flow Rate	UVT	UV Dose	Lamp Status	OK Y/N	Remarks/Alarms/ Events
			Add Expected Value _____	Add Expected Value _____	Add Expected Value _____	Add Expected Value _____	Add Expected Value _____		

Appendix D Glossary of Terms

Term	Definition
Auxiliaries	Valves, flow devices, etc. essential to the workings of the Atlantium system but not directly a part of the Atlantium system.
Ballast	The power supply that translates the electrical power to UV power.
Connection Box	The box that sits on top of each lamp unit and holds the circuit board for the Electrical Cabinet or Ballast Module electrical configurations. Not relevant for Ballast Module/Cable-style.
Controller	Controller that controls operations and dose measurement. Comes in two versions: Standard and Premium. The Standard has a monochromatic screen and several key features. The Premium has a color screen can accommodate a full complement of reporting and trending features.
Cooling System	The system that controls the cooling of the lamp to assure its optimal operation.
DPM Cleaner	The Deposit Prevention Mechanism for cleaning the quartz tubes.
External On/Off	This enables an external source (SCADA, PLC, Process) to turn the Atlantium system on and off.
Electrical configuration styles: **Atlantium provides a choice of electrical configurations.**	
Electrical Cabinet-style (EC)	**EC** - Electrical Cabinet.
Ballast Module	Waterproof case for the ballast which connects via a consolidated plug from the circuit board which sits on top of each lamp unit.
General Alarm	This enables the Atlantium unit to send an alarm to a buzzer, cell phone or other destination.
Inlet/Outlet Valves	Isolating Valves on the Inlet/outlet sides.
Lamp Chamber	The chamber which holds the lamp.
Lifting Support	The lifting element which can also be used to help support the Unit.
Pinhole	This is a small disc that is fitted for each sensor port to assure that the right amount of light penetrates.
Portable CIP System	The portable unit Atlantium sells that connects to the Unit to clean and disinfect it without disassembling. It includes several kits – a valve kit, an accessories kit and the CIP kit itself.
Quartz Chamber	The **quartz pipe** in which the disinfection occurs.
System Ready Signal	The signal the Atlantium unit provides to tell the production system that the machine is ready to supply properly disinfected water.

Term	Definition
System Tuning	This is process is performed when key components are replaced or changed to synchronize them.
TRAC Software	**T**otal **R**eporting **A**nalysis & **C**ontrol Software System; the software application that controls dose measurement and maintenance, and stores, analyzes and reports real time; enables viewing and controlling operations remotely for up to 9 Atlantium systems on one TRAC System. Provides full validated control and One-Touch pre-programmed reports for regulatory compliance with EPA and PMO rules.
Triangle Support Brackets	RZ-Series only- brackets that can be used to support and balance a unit.
Ultrasonic Cleaner	Ultrasonic cleaning system.
UV Intensity Sensor	The sensor that measures the UV intensity in the Lamp chamber and feeds the real time dose calculation.
UVIS Calibration	This is the EPA required process to check that the UV Intensity Sensor is reading correctly and has not drifted beyond the 20% tolerance allowed by the UVDGM.
UVT Analyzer	The sensor that measures the lamp UV intensity through the water. Together with the UV Intensity sensor and the Controller, it analyzes, tracks and reports the water quality.
UVT Analyzer Calibration	This is the EPA required process to check that the UVT Analyzer is reading within 2% of the actual UVT.
Validation Envelope	This is the matrix of flow, power and UVT values that are covered by the EPA validation.